GF Piping Systems

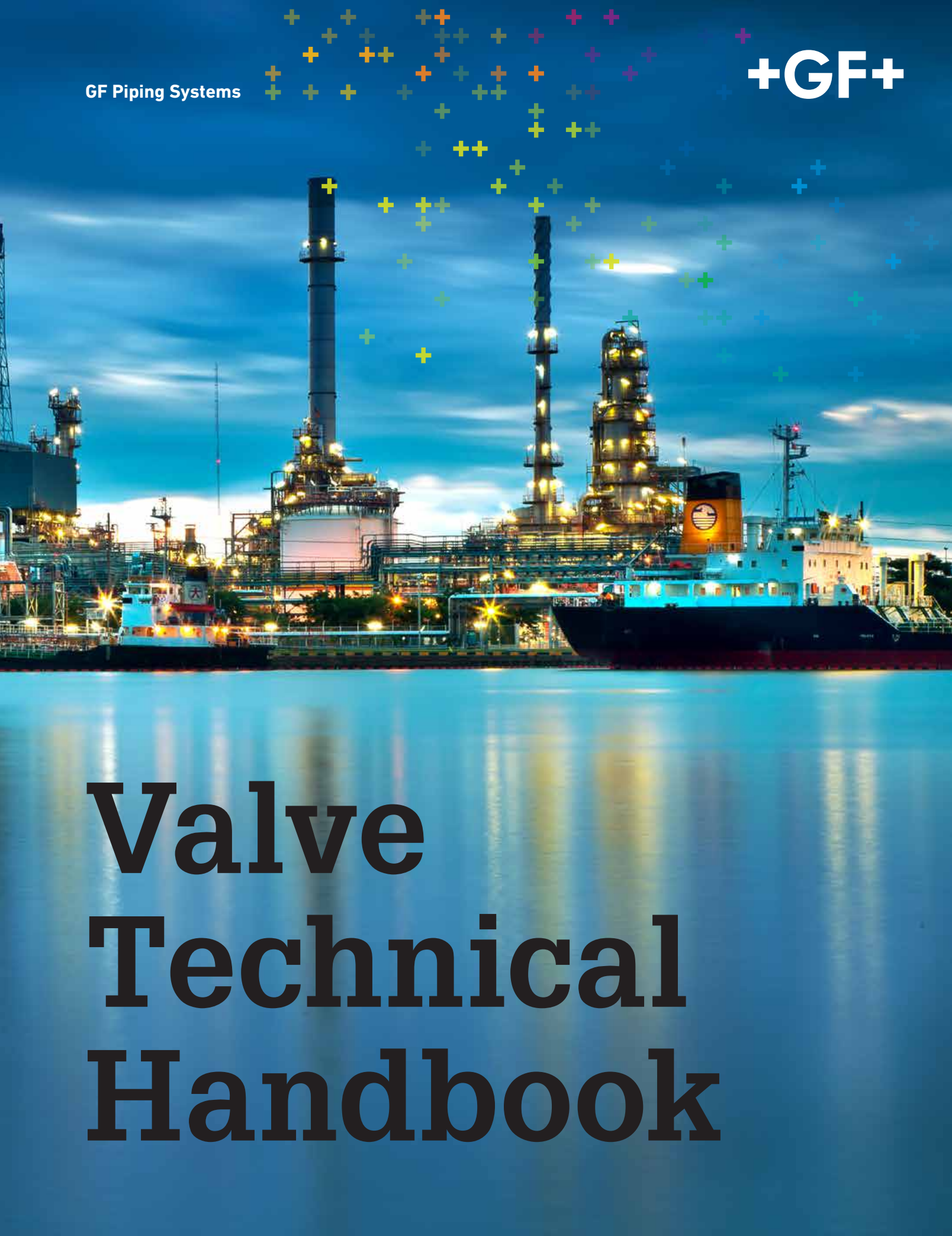

Valve Technical Handbook

GF Piping Systems

+GF+

Did you know that we…

- can adapt a full line of third-party actuators to our valves?
- can adapt our comprehensive actuator line to non-GF valves?
- can install a variety of valve accessories to meet most industry specifications such as explosion-proof and hazardous area?

Yes, we can.

For more information, please contact your nearest GF distributor.

Contents

Valve Selection

Valves are available in a broad spectrum of sizes and materials. Each design has its own advantages, and selection of the proper valve for a particular application is critical. The factors generally considered in the selection of a valve include:

- The properties of process media and the required flow rate.
- The requirements for valve control and/or flow shut off as demanded by the service conditions.
- The ability of the valve to withstand the maximum working pressure and temperature.
- The chemical resistance of the materials of construction
- Actuator requirements, if any.
- Maintenance, repair or replacement requirements

Because of these factors, and many other variables, we work together with the customer to determine the valve best suited for their application.

Criteria for the Selection of Thermoplastic Valves

Valve Type	Description of Media			
	Free of Particulates	Containing Particulates	Viscous	Gaseous
Ball	+	o/–	+	+
Butterfly	+	+/o	+/o	+
Diaphragm	+	+	+/o	+/o
Cone Check	+	o/-	+	+
Wafer Check	+	+/o	+/o	+
Angle Check	+	o	+/o	o
PRV	+	o/-	o/-	-

+ = Recommended, o = Conditionally recommended, - = Not recommended

Thermoplastic and Seal Materials

Abbreviation	Material
PVC	Polyvinyl Chloride
CPVC	Chlorinated Polyvinyl Chloride
PP	Polypropylene
PPn	Natural Polypropylene
ABS	Acrylonitrile Butadiene Styrene
PVDF	Polyvinylidenefluoride
EPDM	Ethylene Propylene Rubber
FPM	Fluorine Rubber
PTFE	Polytetrafluoroethylene

Manual Thermoplastic Valve Size Range by Material

Description	Type	Size Range by Material					
		PVC	CPVC	PP	PPn	ABS	PVDF
Industrial Ball Valve	546	⅜"–4"	⅜"–4"	d16-d110	—	⅜"–4"	⅜"–4"
Midrange Ball Valve	375	⅜"–4"	⅜"–2"	—	½"–2"	—	—
Economy Ball Valve	353/355	½"–2"	—	—	—	—	—
3-way Ball Valve	543	⅜"–2"	⅜"–2"	d16-d63	—	⅜"–2"	⅜"–2"
Control Ball Valve	546	⅜"–2"	⅜"–2"	d16-d63	—	—	d16-d63
Metering Ball Valve	523	⅜" & ½"	⅜" & ½"	d16 & d20	—	—	d16 & d20
Laboratory Ball Cock	324	¼"	—	—	—	—	—
Union Diaphragm Valve	514	½"–2"	½"–2"	d20-d63	—	d20-d63	d20-d63
Spigot Diaphragm Valve	515	d20-d63	d20-d63	d20-d63	d20-d63	d20-d63	d20-d63
Flanged Diaphragm Valve	517	½"–2"	½"–2"	½"–2"	½"–2"	½"–2"	½"–2"
Flanged Diaphragm Valve	317	2½"–6"	2½"–4"	2½"–6"	—	2½"–6"	2½"–6"
Zero Static Diaphragm Valve	519	—	—	d20×20 - d63×d32	d20×20 - d63×d32	—	d20×20 - d110×d63
Wafer Butterfly Valve	567	2"–16"	2"–12"	2"–24"	—	2"–12"	2"–12"
Aqua Wafer Butterfly Valve	563	2"–12"	—	—	—	—	—
Lug Butterfly Valve	578	2"–12"	2"–12"	2"–12"	—	2"–12"	2"–12"
Cone Check Valve	561/562	⅜"–4"	⅜"–4"	d16-d110	—	d16-d110	d16-d110
Vent/Vacuum Breaker Valve	591/595	⅜"–4"	⅜"–4"	d16-d110	—	d16-d110	d16-d110
Wafer Check Valve	369	1½"–24"	—	1½"–12"	—	—	1½"–12"
Y-Check Valve	304	½"–3"	—	d20-d63	—	—	—
Line Strainer	306	½"–3"	½"–2"	d20-d63	—	d20-d63	—
Needle Valve	522	—	—	½"	—	—	¼"–½"
PRV	582/586	⅜"–2"	½"–2"	d20-d63	—	—	d20-d63

Metallic Valve Size Range

Description	Type	Material	Size
Wafer Butterfly Valve	039	Ductile Iron	12"–24"
Lug Butterfly Valve	038	Ductile Iron	14"–24"
Lug Butterfly Valve	365	Ductile Iron	2"–12"

Specialty Valve Detail

Silicone Free Valves

All of the individual components of valves are cleaned with 14MΩ distilled water utilizing a special cleaning process. They are assembled in a designated room with silicone free protective gloves. Dynamic components are slightly lubricated with Klüber Syntheso Pro AA4. Each valve is labeled to indicate silicone free assembly and individually single bagged.

Actuated ball and butterfly valves are assembled in a clean room with conditions complaint with ISO 14644-1 Class 7, U.S. Federal Standard 209E Class 10,000, utilizing a silicone free manual base valve. The actuator and any intermediate kits are cleaned with isopropyl alcohol before they are assembled onto the base valve. Assemblies are single bagged and labeled to indicate silicone free assembly.

Important Note: Once a valve has been assembled with non-silicone free lubricant, it cannot be cleaned and utilized in an application requiring silicone free components. Silicone free valves must be assembled at the GF valve manufacturing plant in Seewis, Switzerland.

Klüber Syntheso Pro AA4

Spec	Pro AA4
Base Oil	Polyalkylene
Thickener	Silicate
Color	Beige
Temperature	5°F to 302°F
Water Resistance 3h/194°F DIN 51807 pt. 1	1-90

Silicone Free Manual Valve Label

LACKSTÖRUNGSFREI
SILICONE FREE

Important Note: GF Piping Systems does not manufacture ball or butterfly valves "lubricant free" because a lubricant is critical to the long term functionality of these types of valves.

High Purity Valves

Subcomponents are manufactured and assembled in a clean room with conditions complaint with ISO 14644-1 Class 7, U.S. Federal Standard 209E Class 10,000. Every valve is pneumatically tested with compressed nitrogen as the media and certified bubble tight exceeding Class VI standards. They are labeled to indicate high purity assembly and double bagged in a clean room with conditions compliant with ISO 14644-1 Class 6, U.S. Federal Standard 209E Class 1,000.

Pressure Loss in Valves

The Cv value is a convenient means of calculating the hydraulic flow rated for valves. It allows for all internal resistance and for practical purposes is regarded as reliable.

The Cv value is defined as the flowrate of water through the valve in gallons per minute with a pressure drop of 1 psi across the valve.

Pressure loss through the valve can be calculated with the following equation:

$$\Delta P = SG\left(\frac{Q}{C_v}\right)^2$$

Where:

Cv	Flow characteristics value in gpm
ΔP	Pressure loss across the valve in psi
SG	Specific gravity of the media
Q	Flowrate through the valve in gpm

Control Valves

Type selection and proper sizing of a control valve is critical in achieving the desired valve performance. The flow characteristics curve indicates how well a given valve will perform as a control valve. A more linear curve indicates better performance because the change stroke is relatively proportional to the change in flow over the entire stroke of the valve. Applications with very tight flow control ranges require valves with an almost perfectly linear characteristics curve. If the flow control range is broad, then a valve with a poor flow characteristic curve will work but still needs to be sized properly. The following are valves commonly used as control valves:

Control Valves

Type	Description	Material	Size Range (inch)	Actuation	Cv Range (gpm)
Type 522	Needle Valve	PP, PVDF	¼"-½"	Not available	0.31-0.78
Type 523	Metering Ball Valve	PVC, CPVC, PP, PVDF	⅜"-½"	Electric	0.8-1.4
Type 546 Control	Characterized Ball Valve	PVC, CPVC, PP, PVDF	⅜"-2"	Electric, pneumatic	6.3-54.4
Type 514-517	Diaphragm Valve	PVC, CPVC, PP, PPn, ABS, PVDF	½"-2"	Pneumatic	8.4-116.8
Type 317	Diaphragm Valve	PVC, CPVC, PP, PVDF	2½"-6"	Pneumatic	69.5-422.3

Custom Valve Solutions


Pneumatic Valves

- Intrinsically safe switches
- Explosion proof switches
- Explosion proof positioners
- Positioners with integrated PID controllers
- Coated rotary actuators
- Custom assemblies: Pneumatic hose, fittings, air sets, solenoids, tags, etc.
- Explosion proof pilot valves
- Intrinsically safe solenoid valves
- Local control stations
- Bus transmitters


Electric Valves

- Explosion proof actuators
- Fail-safe battery backups
- Electronic spring return actuators
- Local control stations
- 2-wire control actuators
- 24VAC, 12VDC, 48V actuators
- Bus transmitters
- Positioners
- Actuator monitoring: current, cycle time, cycle count, torque etc.
- Declutchable manual override lever, manual override handwheel
- Mounting pads and support structure



Manual Valves

- Alternative seal materials
- Custom end connections
- Mounting and support structure
- Explosion proof switches
- Stem/handle extensions
- IP68 submersible gear operators
- Tandem valve operators
- Coated outer bodies and operators
- Exotic hardware materials
- Chain operators: Stainless steel, aluminum, galvanized
- Square nut operators

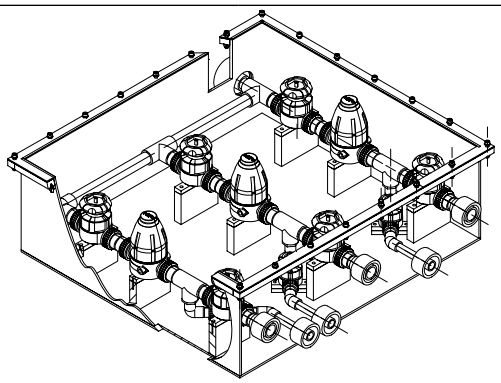

Custom Products

- Mechanical engineering support
- Conceptual design, 3D modeling
- Space planning and system layout
- CNC machined products
- Seismic calculations, hydraulic modeling, flow dynamics
- Skid design
- Double contained boxes
- Instrument enclosures and wiring
- Spool and header assemblies
- Hydrostatic or pneumatic testing
- Prototypes and 3D printing

Manual Valves

Ball Valves					
	Type 546 Industrial Ball Valve	**Type 375 Midrange Ball Valve**	**Type 353/355 COLORO Economy Ball Valve**	**Type 523 Metering Ball Valve**	**Type 543 3-Way Ball Valve**
Material	PVC, CPVC, PP, PVDF, ABS	PVC, CPVC, PPn	PVC	PVC, CPVC, PP, PVDF (ABS, on request)	PVC, CPVC, PP, PVDF, ABS
Seal Material	EPDM, FPM	EPDM, FPM	EPDM	EPDM, FPM	EPDM, FPM
Size Range	⅜"–4"	½"–6"	½"–2"	⅜", ½"	⅜"–2"
Diaphragm Valves					
	Type 514 Union Diaphragm Valve	**Type 515 Spigot Diaphragm Valve**	**Type 517 Flanged Diaphragm Valve**	**Type 317 Flanged Diaphragm Valve**	**Type 519 Zero Static Diaphragm Valve**
Material	PVC, CPVC, PP, PVDF, ABS	PP, PPn, PVDF, ABS	PVC, CPVC, PP, PP-n, PVDF	PVC, CPVC, PP, PVDF	PP, PPn, PVDF
Seal Material	EPDM, FPM, PTFE	EPDM, FPM, PTFE	EPDM, FPM, PTFE	EPDM, FPM, PTFE	EPDM, FPM, PTFE
Size Range	½"–2"	½"–2"	½"–2"	2½"–6"	d20×d20–d100×d63
Butterfly Valves					
	Type 038/039 Metallic Butterfly Valve	**Type 578 Butterfly Valve**	**Type 365 High Purity Butterfly Valve**	**Type 563 Aqua Butterfly Valve**	**Type 567 Butterfly Valve**
Material	Ductile Iron	PVC, CPVC, PP, PVDF, ABS	Coated ductile iron	PVC	PVC, CPVC, PP, PVDF, ABS
Seal Material	EPDM, FPM	EPDM, FPM, PTFE	PTFE/PFA	EPDM	EPDM, FPM, PTFE
Size Range	14"–24"	2"–12"	2"–12"	2"–12"	2"–24"
Check and Angle Seat Valves					
	Type 591/595 Vent and Vacuum Breaker Valve	**Type 304 Y-Check Valve**	**Type 561/562 Cone Check Valve**	**Type 369 Wafer Check Valve**	**Type 306 Line Strainer**
Material	PVC, CPVC, PP, PVDF, ABS	PVC (transparent)	PVC, CPVC, PP, PVDF, ABS	PVC (PP & PVDF optional)	PVC (transparent)
Seal Material	EPDM, FPM	EPDM, FPM	EPDM, FPM	EPDM, FPM	EPDM, FPM
Size Range	⅜"–4"	½"–3"	⅜"–4"	1½"–12"	½"–3"

Actuated Valves

Ball Valves				
	Type 179–184 Industrial Electric Ball Valve	**Type 127 Midrange Electric Ball Valve**	**Type 104 Economy Electric Ball Valve**	**Type 231–233 Pneumatic Ball Valve**
Actuator Type	EA25-EA120	EA15	EA04	PA11-PA45
Function	Open/Close Modulating	Open/Close	Open/Close	FC, FO, DA Modulating
Cycle Time	5sec./90°	5sec./90°	9sec./90°	1-2 sec.
Material	PVC, CPVC, PP, PVDF, ABS	PVC, CPVC, ABS	PVC, CPVC, ABS	PVC, CPVC, PP, PVDF, ABS
Seal Material	EPDM, FPM	EPDM, FPM	EPDM, FPM	EPDM, FPM
Size Range	⅜"–4"	⅜"–2"	⅜"–2"	⅜"– 4"

3-way Ball Valves				
	3-way Ball Valve with Pneumatic Actuator Type 285–288	**3-way Ball Valve with Electric Actuator Type 167–170**	**3-way Ball Valve with Electric Actuator Type 125–128**	
Actuator Type	PA11/21	EA25	EA15	
Function	FC, FO, DA Modulating	On/Off, Modulating	On/Off	
Cycle Time	1-2 sec.	5sec./90°	5sec./90°	
Material	PVC, CPVC, PP, PVDF, ABS	PVC, CPVC, PP, PVDF, ABS	PVC	
Seal Material	EPDM, FPM	EPDM, FPM	EPDM, FPM	
Size Range	⅜"–2"	⅜"–2"	⅜"–2"	

Butterfly Valves				
	Type 145 Electric Wafer Butterfly Valve	**Type 147 Electric Lug Butterfly Valve**	**Type 240 Pneumatic Wafer Butterfly Valve**	**Type 244 Pneumatic Lug Butterfly Valve**
Actuator Type	EA45/EA120/EA250	EA45/EA120/EA250	PA30-PA70	PA30-PA70
Function	Open/Close Modulating	Open/Close Modulating	FC, FO, DA Modulating	FC, FO, DA Modulating
Cycle Time	15-25 sec.	15-25 sec.	1-2 sec.	1-2 sec.
Material	PVC, CPVC, PP, PVDF, ABS	PVC, CPVC, PP, PVDF, ABS	PVC, CPVC, PP, PVDF, ABS	PVC, CPVC, PP, PVDF, ABS
Seal Material	EPDM, FPM, PTFE/FPM	EPDM, FPM, PTFE/FPM	EPDM, FPM, PTFE/FPM	EPDM, FPM, PTFE/FPM
Size Range	2"–24"	2"–12"	2"–24"	2"–12"

Actuated Valves

Diaphragm Valves				
	DIASTAR Ten Pneumatic Diaphragm Valve	**DIASTAR TenPlus Pneumatic Diaphragm Valve**	**DIASTAR Ten Pneumatically Actuated Zero Static Valve**	**DIASTAR TenPlus Pneumatically Actuated Zero Static Valve**
Functions	FC, FO, DA Modulating	FC Modulating	FC Modulating	FC Modulating
Pressure Rating	150psi combined	150psi	150psi combined	150psi
Control Time	3 sec.	3 sec.	3 sec.	3 sec.
Material	PVC, CPVC, PP, PPn, PVDF, ABS	PVC, CPVC, PP, PVDF	PPn	PP, PVDF
Seal Material	EPDM, FPM, PTFE/ EPDM, PTFE/FPM	EPDM, FPM, PTFE/EPDM, PTFE/FPM	EPDM, PTFE/EPDM	EPDM, PTFE/EPDM, PTFE/FPM
Size Range	½"–2"	½"–2"	d20×d20–d63×d32	d20×d20–d110×d63

Diaphragm Valves			
	DIASTAR Six Pneumatic Diaphragm Valve	**DIASTAR 025 Pneumatic Diaphragm Valve**	**DIASTAR 604/605 Pneumatic Dosing Valve**
Functions	FC	FC, FO, DA Modulating	FC, FO, DA
Pressure Rating	90psi combined	150psi	90psi combined
Control Time	3 sec.	3 sec.	<1 sec.
Material	PVC, CPVC, ABS	PVC, CPVC, PP, PVDF	PVC, CPVC, PP, PVDF
Seal Material	EPDM	EPDM, FPM, PTFE/ EPDM, PTFE/FPM	EPDM, FPM, PTFE/ EPDM, PTFE/FPM
Size Range	¾"–2"	2½"–6"	½"

PRVs and Rotameters

PRVs and Rotameters			
	Rotameter	**Type 582 Pressure Reducing Valve**	**Type 586 Pressure Retaining Valve**
Material	Tube: PSU, PA or PVC Ends: PVC, CPVC, PP, PPn, ABS, PVDF	PVC, CPVC, PP, PVDF	PVC, CPVC, PP, PVDF
Seal Material	EPDM, FPM	PTFE with FPM or EPDM	PTFE with FPM or EPDM
Size Range	⅜"–2½"	½"–2"	½"–2"

Valve Spare Parts

The below tables show the available spare parts for the listed valves. These tables do not include every type of valve offered by GF Piping Systems

Type 546/375

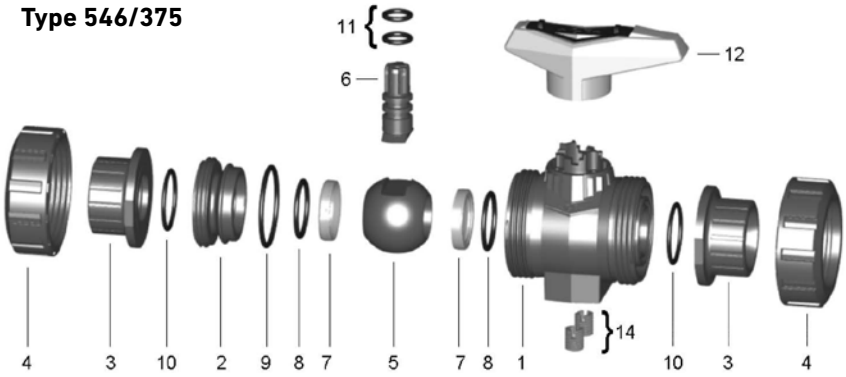

Type 546

Spare Part No.	Description	Note
4	Valve nut	-
3	Valve end	-
10	Face seal	-
5	Ball	-
6	Stem	-
12	Handle	-
5-9, 11	Ball set	-
7-11	Seal set	-
1-2, 5-12, 14	Core	-

Type 375

Spare Part No.	Description	Note
4	Valve nut	PVC only
3	Valve end	PVC only

Type 523

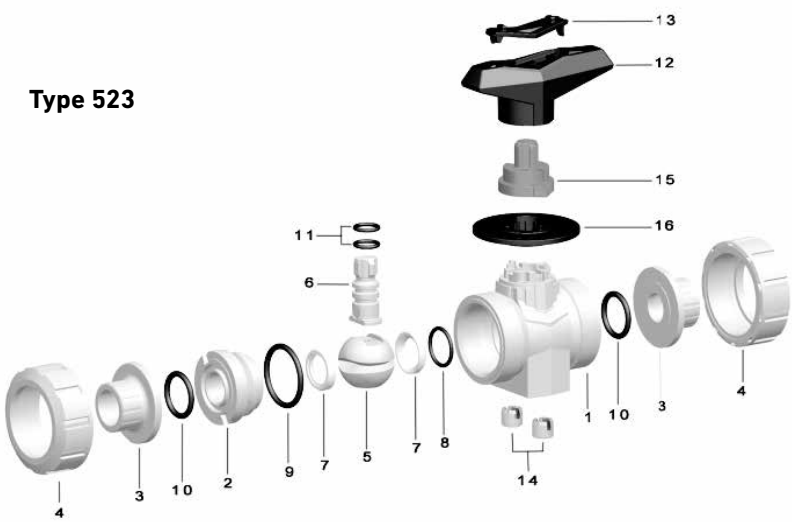

Type 523

Spare Part No.	Description	Note
4	Valve nut	Same as 546
3	Valve end	Same as 546
10	Face seal	Same as 546
6	Stem	Same as 546
12-13	Handle	-
7-9, 11	Seal set	Same as 546
16	Index plate	-
15	Indicator insert	-
1-2, 5-14	Core	-

Type 543 Vertical

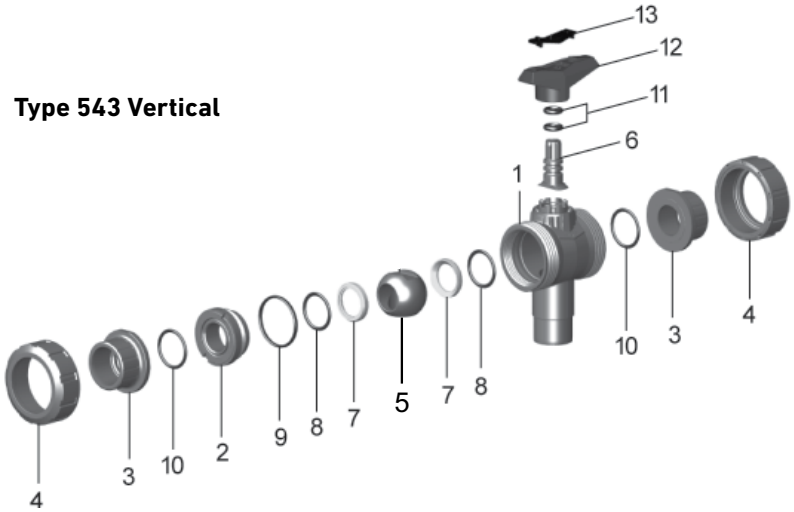

Type 543 Vertical

Spare Part No.	Description	Note
4	Valve nut	Same as 546
3	Valve end	Same as 546
10	Face seal	Same as 546
12-13	Handle	-
5-9, 11	Ball set	-
7-9, 11	Seal set	Same as 546
1-2, 5-13	Core	-

Type 543 Horizontal

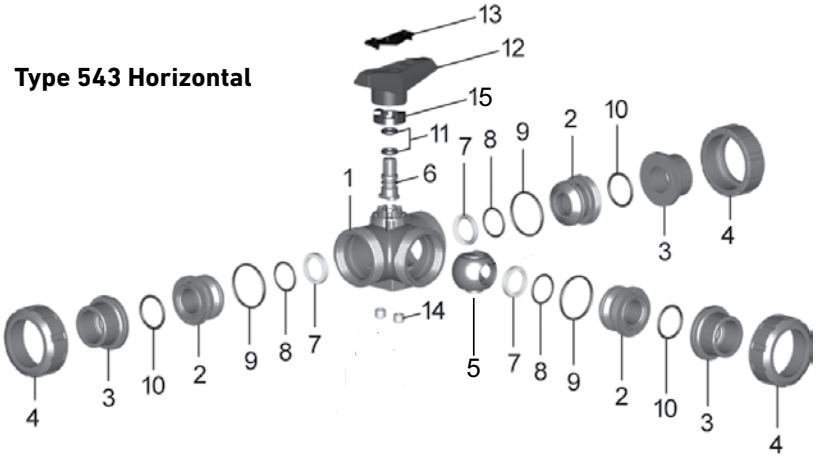

Type 543 Horizontal

Spare Part No.	Description	Note
4	Valve nut	Same as 546
3	Valve end	Same as 546
10	Face seal	Same as 546
12-13	Handle	-
5-9, 11	Ball set	-
7-9, 11	Seal set	-
15	Turn limiter	-
1-2, 5-14	Core	-

Type 563/567/578

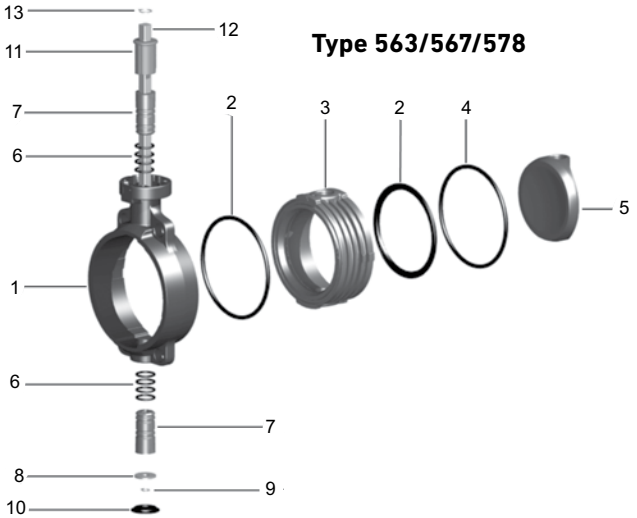

Type 563/567/578

Spare Part No.	Description	Note
5	Disc	-
2	Face seal	Sold as 1 pc
3-4	Inner body/disc seal	Not sold separate
6-7	Shaft Bushing with seals	Sold in set
-	Lever/Index plate	Not shown
-	Gear op	Not shown

Type 561/562/591/591

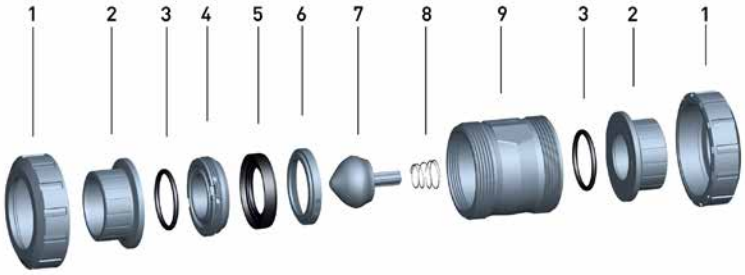

Type 561/562/591/595

Spare Part No.	Description	Note
1	Valve end	Same as 546
2	Valve end	Same as 546
3	Face seal	Same as 546
5	Profile seal	-
7	Cone	-
8	Spring	-
3-9	Core	-
-	Cap 591-595	Not shown

Diaphragm Valve

Diaphragm Valves

Spare Part No.	Description	Note
1	Body	-
2	Union end	Standard non-vinyl union
3	Union nut	Standard non-vinyl union
-	Face seal (not shown)	Standard non-vinyl union
4-5	Diaphragm	-
6	Compressor	-
7-9	Spindle	-
6-13	Bonnet assembly	-
9	Position indicator	-
12-13	Handle	-

True Union Ball Valve
Type 546

General

- **Size**: ⅜"–4"
- **Material**: PVC, CPVC, PROGEF® Standard PP, ABS, SYGEF® Standard PVDF
- **Seat**: PTFE
- **Seals**: EPDM, FPM
- **End Connection**: Solvent cement socket, threaded, flanged, fusion spigot, fusion socket
- **Mounting**: Stainless steel threaded inserts
- **Standard Pack Quantity**: 1 valve

Key Certifications

- **NSF 61**: PVC and CPVC
- **FDA CFR 21 177.1520**: PP and PVDF
- **FDA CFR 21 177.2600**: EPDM and FPM
- **FDA CFR 21 177.1550**: PTFE
- **USP Class VI (physiological non-toxic)**: EPDM, FPM, PTFE, PP and PVDF
- **ABS**: All materials

Sample Specification

The Type 546 Ball Valve shall be true union and utilize a floating ball design. The ball shall be fully molded and full port with two way blocking capability. The stem shall be blowout proof, utilizing a double o-ring seal and a predetermined break point opposite the media side of the stem seals. The seat carrier shall be adjustable and reverse threaded. The handle shall double as a seat carrier adjustment or removal tool. The valve nut threads shall be of buttress type. Ball seats shall have an elastomeric backing o-ring and all elastomeric seals shall be of like material. ANSI flanged versions shall meet ANSI B16.5 150lb standards. All valves shall be tested in accordance to ISO9393 and designed to ISO16135 standards. All valves shall be manufactured under ISO9001 for Quality and ISO14001 for Environmental Management. Following assembly, every valve shall be tested and certified bubble tight exceeding Class VI standards.

Material Specification

PVC valves shall meet ASTM D1784 cell classification 12454 standards. CPVC valves shall meet ASTM D1784 cell classification 23447-B standards. PP valves shall meet ASTM D5847-14 cell classification PP0510B66851 standards. ABS valves shall meet ASTM D3965 cell classification 42222 standards. PVDF valves shall be type 1, grade 2 according to ASTM D3222 standards. Valves of all materials shall be RoHS compliant.

Components

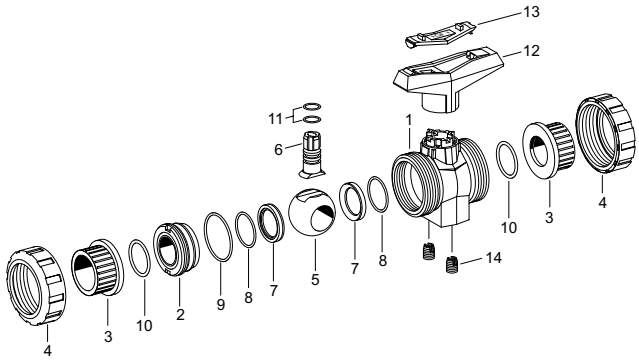

Key Design Features

The Type 546 Ball Valve comes standard with stainless steel threaded inserts for easy and secure mounting. Valves are available without inserts upon request

The Type 546 Ball Valve stem utilizes a predetermined break point opposite the media side of the stem seals. This break point is a groove with an inner diameter that is less than the stem seal grooves. This ensures that if there is a stem failure, the failure will occur at that point and media will not leak to the outside of the valve.

Optional Features

- **Actuation**: Electric, pneumatic
- **Limit Switches**: Mechanical, inductive
- **Handle**: Lockable handle, handle extension
- **Mounting pad**: Additional mounting option for valve base
- **Universal Adapter Kit**: ISO mount for actuation
- **Seals**: Alternative materials available upon request
- **Seat**: PVDF
- **End Connection**: Alternatives available upon request
- **Control Ball**: For throttling applications
- **Vented Ball**: For sodium hypochlorite use
- **Cleaned**: Silicone free/oil free

Valve Components

Part	Description	Material
1	Valve body	PVC, CPVC, PP, ABS or PVDF
2	Seat carrier	PVC, CPVC, PP, ABS or PVDF
3	Valve end	PVC, CPVC, PP, PPn, ABS, PE or PVDF
4	Valve nut	PVC, CPVC, PP, ABS or PVDF
5	Ball	PVC, CPVC, PP, ABS or PVDF
6	Stem	PVC, CPVC, PP, ABS or PVDF
7	Seat	PTFE
8	Backing seal	EPDM or FPM
9	Body seal	EPDM or FPM
10	Face seal	EPDM or FPM
11	Stem seal	EPDM or FPM
12	Handle	Glass-filled PP
13	Handle clip	Glass-filled PP
14	Mounting insert	304 Stainless steel

The Type 546 Ball Valve seat carrier is reverse threaded while the valve nut utilizes a standard thread. This ensures that the seat carrier is not inadvertently tightened when the valve nut is tightened and avoids possible stem failures.

The valve handle doubles as a seat carrier adjustment tool by simply inserting the handle clip into the pre-molded notches on the seat carrier, making on-site maintenance quick and easy.

Technical Data

Pressure Temperature Curves

The following graphs are based on a 25 year lifetime water or similar media application

PVC

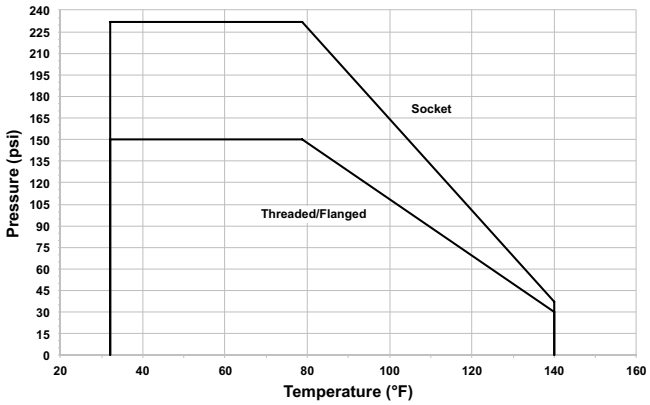

CPVC

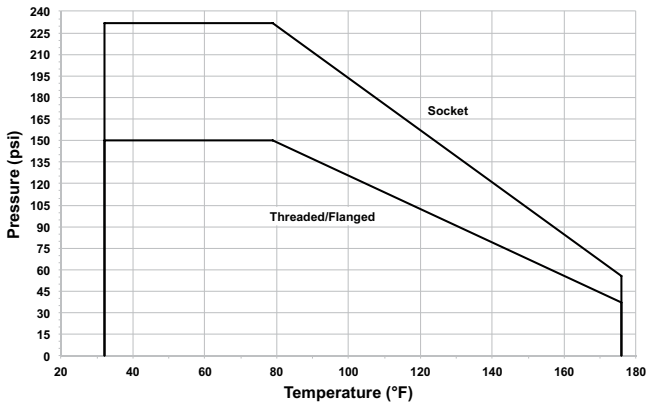

PP

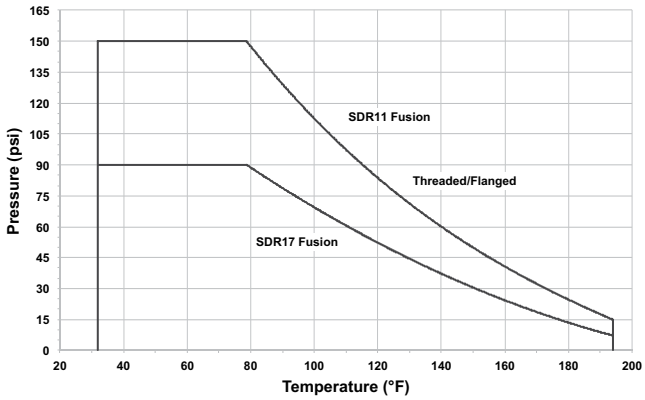

ABS

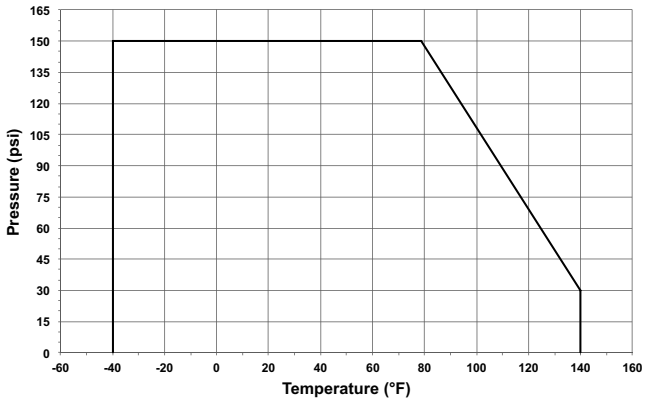

PVDF

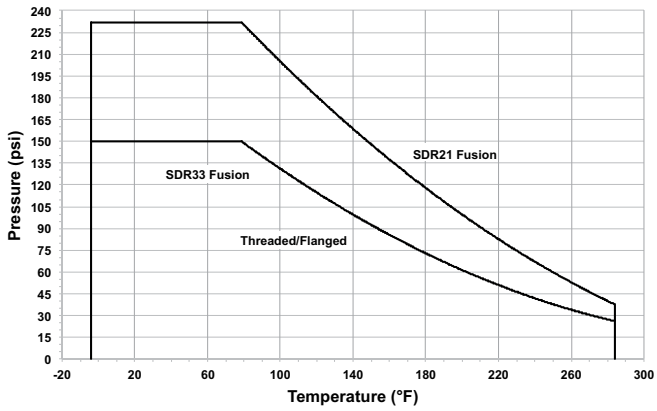

Pressure-Temperature

Material	Temperature Range (°F)	Max Pressure (psi)
PVC	32 to 140	232*
CPVC	32 to 176	232*
PP	32 to 176	150*
ABS	-40 to 140	150
PVDF	-4 to 284	232*

*Dependant on end connection as shown in P-T curves

Vacuum Service

The Type 546 is rated for full vacuum service. Maximum differential pressure of 15psi at 122°F.

Flow

The following information is based on water applications at 68° F

Flow Characteristics

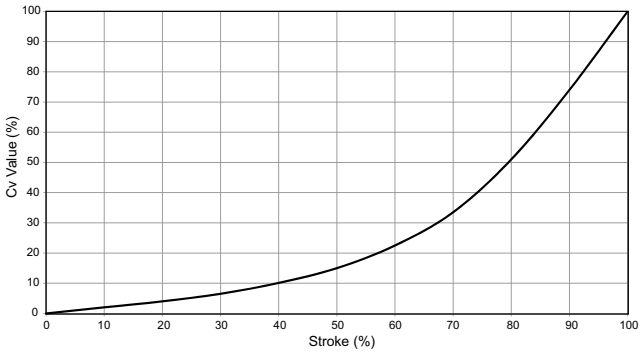

Cv Value

Size (inch)	d (mm)	Cv (gal/min)
⅜	16	5
½	20	13
¾	25	25
1	32	49
1¼	40	70
1½	50	112
2	63	217
2½	75	350
3	90	490
4	110	770

Vented Ball: Optional Feature

A vented ball is an optional feature with all variations of the Type 546 Ball Valve. This version of the valve has dedicated part numbers that utilize a special ball with a ⅛ inch hole. This ball is designed for applications in which the media requires out-gassing such as sodium hypochlorite. The hole functions as a vent for media that would normally be trapped inside a closed ball. The vent prevents potentially dangerous pressure from building up inside the valve. The vent is located opposite the seat carrier side of the ball valve and this vent is recommended to be installed upstream.

Chemical applications vary from system to system and variations such as concentration, temperature and pressure need to be considered. It is the responsibility of the individual user to verify compatibility and GF recommends that every application be verified and tested by internal experts or a third party.

Control Ball: Optional Feature

The Type 546 Control Ball is a keyed design and is available in PVC, CPVC, PP and PVDF. This ball is designed for applications requiring flow control. The keyed orifice provides a nearly linear flow characteristic curve and is superior to V-notch designs. This ball is not bidirectional. The required installation direction is to have the keyed orifice downstream. The Type 546 Control Ball can be added to any Type 546 Ball Valve within the available size range.

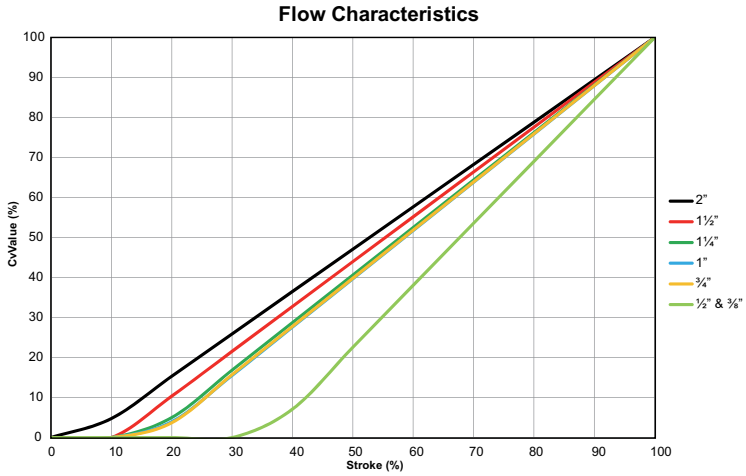

Cv Value

Size (inch)	d (mm)	Cv (gal/min)
⅜, ½	16, 20	6.3
¾	25	11.6
1	32	16.4
1¼	40	29.0
1½	50	43.6
2	63	54.4

Dimensions

The following tables are shown in millimeters unless otherwise specified

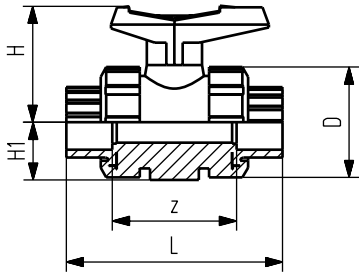

Socket/threaded

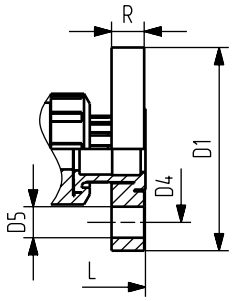

Flanged

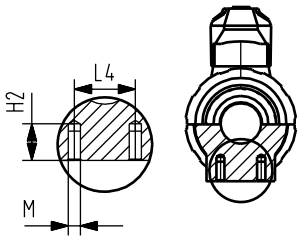

All configurations

All Materials

Size (inch)	d (mm)	D	H	H1	H2	L4	M
⅜	16	50	57	27	12	25	M6
½	20	50	57	27	12	25	M6
¾	25	58	67	30	12	25	M6
1	32	68	73	36	12	25	M6
1¼	40	84	90	44	15	45	M8
1½	50	97	97	51	15	45	M8
2	63	124	116	64	15	45	M8
2½	75	166	149	85	15	70	M8
3	90	200	161	105	15	70	M8
4	110	238	178	123	22	120	M12

PVC/CPVC

	IPS Socket		Threaded NPT		ANSI Flanged				
Size (inch)	L	z	L	z	L	D1 (inch)	D4 (inch)	D5 (inch)	R (inch)
⅜	105	67	98	69	-	-	-	-	-
½	105	61	98	65	149	3.5	2.38	0.56	0.57
¾	121	70	111	74	165	3.88	2.75	0.63	0.58
1	133	76	127	82	184	4.25	3.13	0.63	0.66
1¼	154	90	147	98	206	4.63	3.5	0.56	0.69
1½	164	94	157	110	221	5	3.88	0.56	0.76
2	183	107	183	135	251	6	4.75	0.75	0.82
2½	233	144	234	166	311	7	5.5	0.75	0.98
3	254	151	255	175	343	7.5	6	0.75	1.02
4	301	174	302	214	397	9	7.5	0.75	1.11

ABS

	Metric Socket	
d (mm)	L	z
16	92	64
20	95	64
25	110	72
32	123	79
40	146	94
50	157	95
63	183	107
75	233	144
90	254	151
110	301	174

Dimensions

The following tables are shown in millimeters unless otherwise specified

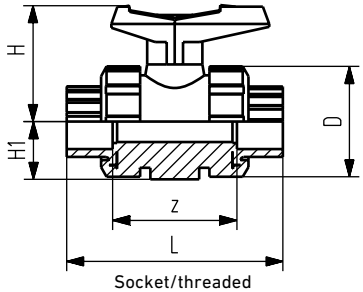

Socket/threaded

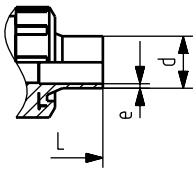

IR/butt fusion

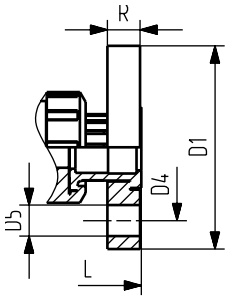

Flanged

PP

	Metric Socket		Metric IR/Butt		Threaded NPT		ANSI Flanged				
d (mm)	L	z	L	e	L	z	L	D1 (inch)	D4 (inch)	D5 (inch)	R (inch)
16	93	67	-	-	96	71	-	-	-	-	-
20	95	66	130	1.9	99	64	166	3.74	2.36	0.63	0.63
25	109	77	143	2.3	111	76	177	4.13	2.76	0.63	0.67
32	119	83	150	2.9	127	83	191	4.53	3.11	0.63	0.71
40	135	99	171	3.7	146	100	209	5.51	3.5	0.63	0.79
50	147	105	191	4.6	157	111	229	5.91	3.86	0.63	0.87
63	168	117	220	5.8	183	134	253	6.5	4.76	0.75	0.94
75	233	167	266	6.8	-	-	416	7.28	5.51	0.75	1.02
90	254	180	264	8.2	-	-	414	7.87	5.98	0.75	1.06
110	301	215	301	10.0	-	-	451	9.02	7.48	0.75	1.1

PVDF

	Metric Socket		Metric IR/Butt		Threaded NPT		ANSI Flanged				
d (mm)	L	z	L	e	L	z	L	D1 (inch)	D4 (inch)	D5 (inch)	R (inch)
16	93	67	-	-	96	69	-	-	-	-	-
20	95	66	130	1.9	99	64	174	3.74	2.36	0.63	0.63
25	109	77	143	1.9	111	76	189	4.13	2.76	0.63	0.67
32	119	83	150	2.4	127	83	199	4.53	3.11	0.63	0.71
40	135	99	171	2.4	146	101	235	5.51	3.5	0.63	0.79
50	147	105	191	3.0	157	111	243	5.91	3.86	0.63	0.87
63	168	117	220	3.0	183	135	261	6.5	4.76	0.75	0.94
75	233	167	266	3.6	-	-	426	7.28	5.51	0.75	1.02
90	254	180	264	4.3	-	-	426	7.87	5.98	0.75	1.06
110	301	215	301	5.3	-	-	487	9.02	7.48	0.75	1.1

The Multifunctional
5-Series Ball Valve

Multifunction Module General

- **Housing Material:** Glass-filled PP
- **Connection:** Cable gland (units with switches)
- **Protection Class:** IP67
- **Size:** ⅜" - 4" (d16–d110)
- **Temperature:** 14°F to 122°F

Sample Specification

The Multifunction Module (MFM) shall be designed specifically for use with GF 5-Series Ball Valves. The multifunction module to valve interface shall be keyed so that only one mounting orientation is possible without physical manipulation. The MFM shall be secured to the valve body with torx screws and compatible with both manual and actuated ball valves. A standard F07 pattern shall integrated in units sizes 2½"–4" (d75–d110). All valves shall be manufactured under ISO9001 for Quality and ISO14001 for Environmental Management.

MFM with Switch Limitations

The Multifunction Module is designed specifically around the Type 546 Ball Valve but it can be used with all 5-Series Ball Valves, excluding the Type 523 Metering Ball Valve because it requires a 180° stroke for full functionality. There are some limitations when using a MFM switch with Type 543 3-way Ball Valves due to the location of the cams. MFM switch kits will not fully function when used with 3-way ball valves with porting configurations that require strokes of anything other than 90° and it needs to be ensured that the cams are positions to engage the switches at the desired end stops. Porting positions defined as "standard" are the two positions at which a standard switch will engage. For all other configurations please contact GF for assembly suggestions.

Key Design Feature

The Multifunction Module (MFM) is designed to allow an operator to easily create a panel mount when used in conjunction with the PVC handle extension. If the pins that secure the multifunction module cover to the unit are removed, the through holes create the mounting pattern. This feature is standard in modules without limit switches but also included in all modules. Modules sizes 2½" - 4" are designed slightly differently but a panel mount is still possible utilizing the F07 mounting pattern per ISO 5211 standards.

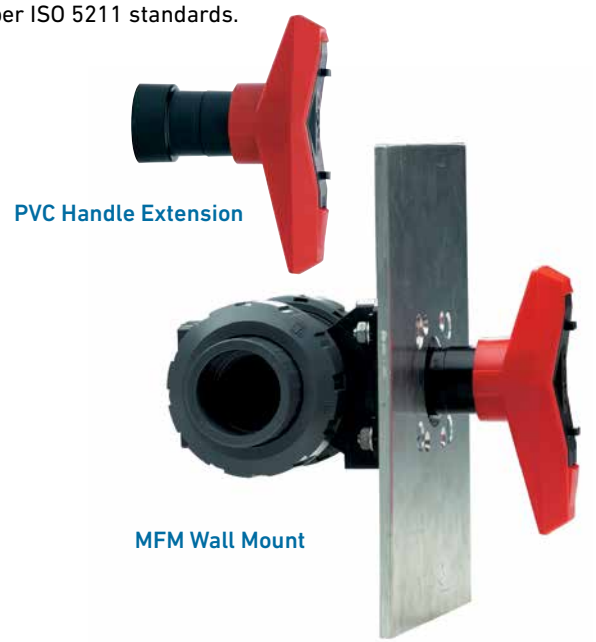

PVC Handle Extension

MFM Wall Mount

Switch Technical Data

Mechanical w/ AgNi Contacts

- **Voltage:** 250VAC
- **Max Current:** 6A

Mechanical w/ Au Contacts

- **Voltage:** 4-30VDC
- **Max Current** 1-100mA

Inductive PNP/NPN

- **Switch Type:** 3-wire proximity
- **Voltage:** 5-30VDC
- **Current with Switch Engaged:** 1-100mA
- **Current with Switch Disengaged:** ≤10µA
- **Non-Loaded Supply Current:** 15mA

Intrinsically Safe

- **Switch:** PEPPERL+FUCHS Inductive Sensor
- **Voltage:** 8.2VDC
- **Current with Switch Engaged:** 1mA
- **Current with Switch Disengaged:** 3mA
- **Standard:** EN 60079-0:2012, EN 60079-11:2012
- **Hazardous Area:** PTB 00 ATEX 2032X
- **Device Category:** 2G; 1D
- **ATEX Protection:** II 2G Ex ia IIC T6...T1 Gb

Wiring Diagram

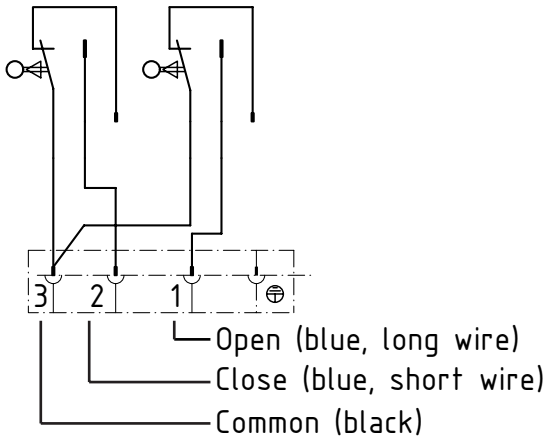

Mechanical

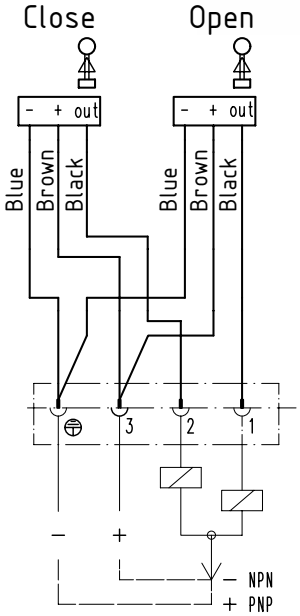

Inductive

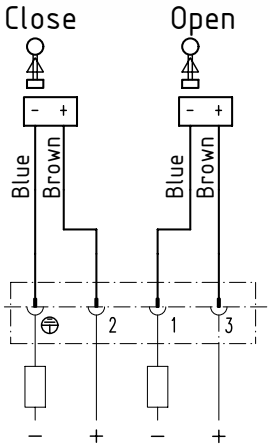

Intrinsically Safe

Dimensions

The following tables are shown in millimeters unless otherwise specified

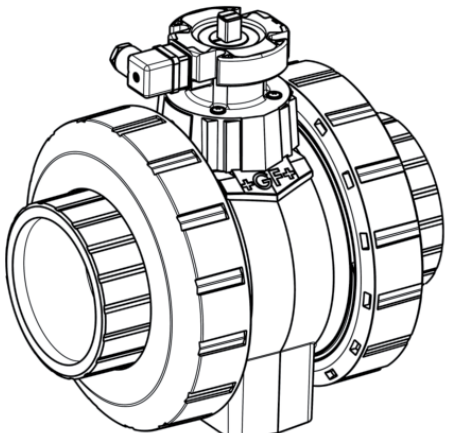

2½' - 4' (d75 - d110) Switch Orientation

All Materials

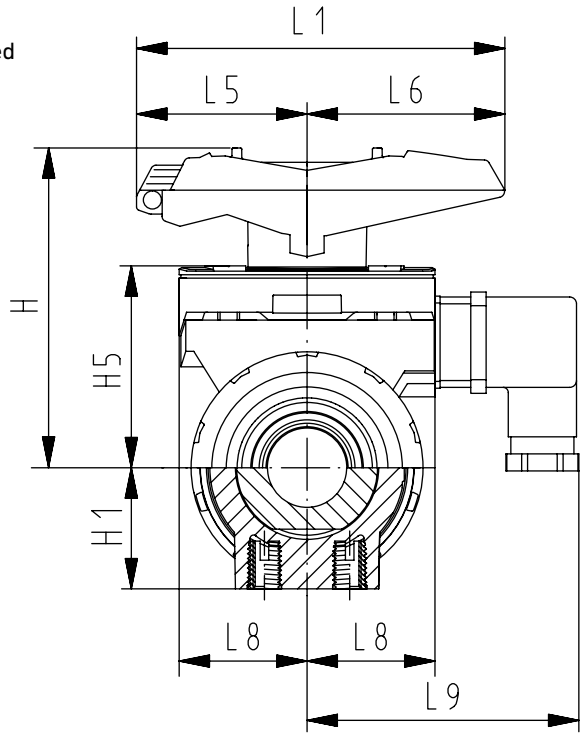

All Materials

MFM

Size (inch)	d (mm)	H	H1	H5	L1	L5	L6	L8	L9
⅜	16	79	27	50	87	42	45	34	73
½	20	79	27	50	87	42	45	34	73
¾	25	88	30	53	108	50	58	38	77
1	32	94	30	53	108	50	58	38	77
1¼	40	113	44	72	140	66	75	41	80
1½	50	119	44	72	140	66	75	41	80
2	63	141	64	94	165	78	87	46	85
2½	75	224	85	157	270	64	206	45	-*
3	90	235	85	157	270	64	206	45	-*
4	110	245	123	175	320	64	256	53	-*

* 2½" - 4" (d75 - d110) MFM DIN plugs are parallel to the pipe, not perpendicular as indicated in dimensional drawing. DIN plug length is 39mm.

MFM Wall Mount ⅜" - 2" (d16 - d63)

Size (inch)	d (mm)	B	L	L2	L3
⅜	16	67	72	54	40
½	20	67	72	54	40
¾	25	75	72	52	46
1	32	75	72	52	46
1¼	40	81	80	60	50
1½	50	81	80	60	50
2	63	91	93	68	65

All above dimensions apply to MFM with switches

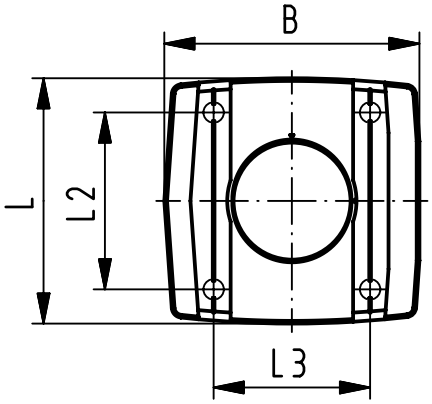

Handle Extension

The PVC Handle Extension can accommodate any 5-Series Ball Valve sizes ⅜" - 2" (d16 - d63). A stem adapter (lower piece) and a handle adapter (upper piece) are included, the operator simply cuts a piece of ¾" SCH 80 PVC to extend the handle to the desired height and solvent cements the adapter on either end. GF recommends a maximum PVC pipe stub length of 12".

General

- **Size:** ⅜"–2" (d16–d63)
- **Material**: PVC
- **Pipe Stub**: ¾" SCH 80 PVC (Not included)
- **Handle**: Standard red or black only. Lockable handle will not lock

Dimensions

The following tables are shown in millimeters unless otherwise specified

PVC Handle Extension ⅜"–2" (d16–d63)

Size (inch)	d (mm)	D	H	H1	H2	H3
⅜	16	26	41	52	29	36
½	20	26	41	52	29	36
¾	25	36	50	62	32	39
1	32	36	50	62	32	39
1¼	40	40	65	76	34	44
1½	50	40	65	76	34	44
2	63	44	84	87	37	48

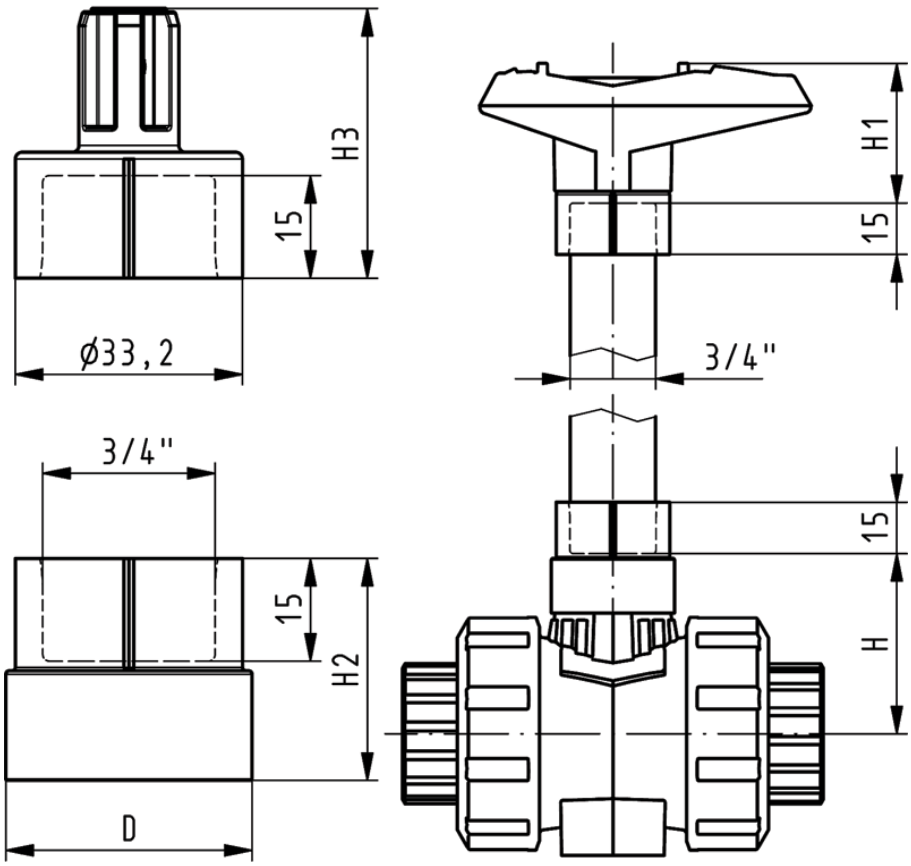

Handle Stub

The PVC Handle Stub can accommodate any Type 546 Ball Valve sizes 2½" - 4" (d75 - d110). The height cannot be adjusted from the standard stub height. It is designed primarily for use with insulated valves or as an extension through a panel.

Dimensions

The following tables are shown in millimeters unless otherwise specified

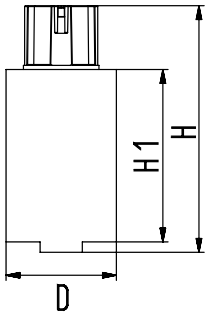

PVC Handle Stub 2½"–4" (d75–d110)

Size (inch)	d (mm)	D	H	H1
2½	75	58	143	100
3	90	58	143	100
4	110	64	143	100

Mounting Pad

The Mounting Pad can accommodate any 5-Series Ball Valve size ⅜"–2" (d16–d63) that has integrated mounting inserts and is designed to allow for the valve (manual or actuated) to be mounted to a flat surface without rear entry to the mounting surface. The material of construction is glass-filled PP and mounting hardware to attached the pad to the valve base is inclusive.

Dimensions

The following tables are shown in millimeters unless otherwise specified

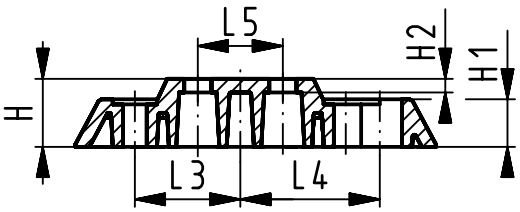

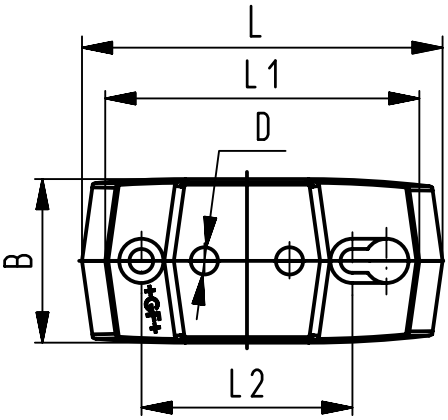

5-Series Ball Valve Mounting Pad

Size (inch)	d (mm)	B	D	H	H1	H2	L	L1	L2	L3	L4	L5
⅜	16	48	8	20	14	4	106	92	62	31	41	25
½	20	48	8	20	14	4	106	92	62	31	41	25
¾	25	48	8	20	14	4	106	92	62	31	41	25
1	32	48	8	20	14	4	106	92	62	31	41	25
1¼	40	54	9	20	14	4	149	134	104	52	62	45
1½	50	54	9	20	14	4	149	134	104	52	62	45
2	63	54	9	20	14	4	149	134	104	52	62	45

Type 546 Lockable Handle

The lockable handle is an available accessory for all Type 546 Ball valves and is a standard feature with some PVC and CPVC Type 546 Ball Valves. A screw connection to the valve stem can ensure that the handle will remain secured to the valve and a padlock through hole accommodates lockout tagout application procedures.

General

- **Size:** ⅜" - 4" (d16 - d110)
- **Material**: Glass-filled PP
- **Padlock**: Lockout tagout capabilities

Key Design Features

Lockout/Tagout

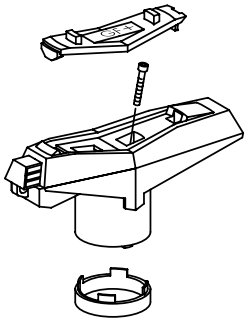

Torx Screw

Design Features: Lockable Handle ⅜"-2"

- Utilizes spring loaded retaining bar for locking function
- Lockable index positions of 0° and 90°
- Torx screw secures handle to valve stem inclusive

Design Features: Lockable Handle 2½"-4"

- Utilizes index plate for locking function
- Lockable index positions every 5° (0° to 90°)
- Optional torx screws to secure handle to valve stem

Dimensions

The following tables are shown in millimeters unless otherwise specified

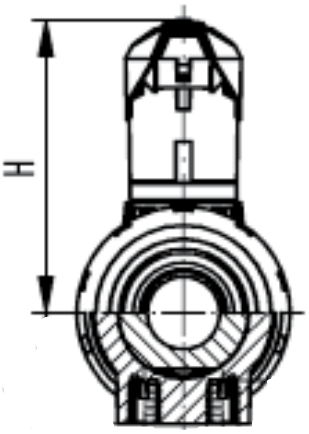

All Sizes

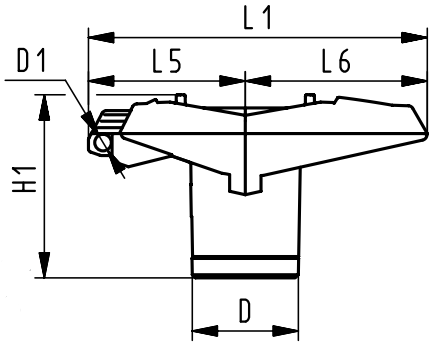

⅜" - 2" (d16 - d63)

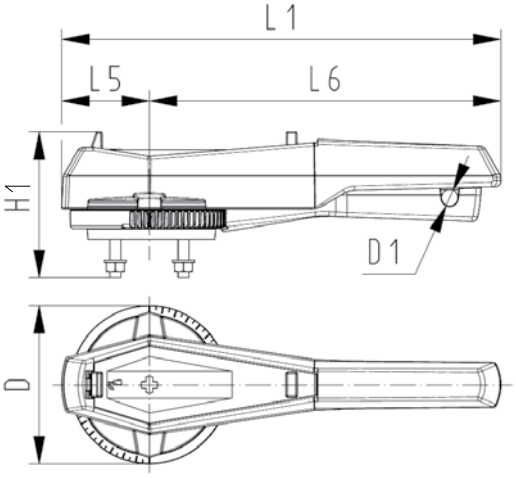

2½" - 4" (d75 - d110)

Lockable Handle

Size (inch)	d (mm)	D	D1	H	H1	L1	L5	L6
⅜	16	26	5	79	53	87	42	45
½	20	26	5	79	53	87	42	45
¾	25	34	5	88	59	108	50	58
1	32	34	5	94	59	108	50	58
1¼	40	40	5	113	69	140	66	75
1½	50	40	5	119	69	140	66	75
2	63	44	5	141	80	165	78	87
2½	75	115	12	224	105	270	64	206
3	90	115	12	235	105	270	64	206
4	110	115	12	245	107	320	64	256

True Union Ball Valve
Type 375

CORZAN®

General

- **Size**: ⅜"–4"
- **Material**: PVC, CORZAN® CPVC, or PPn
- **Seat**: PTFE
- **Seals**: EPDM or FPM
- **End Connection**: Solvent cement socket, threaded, flanged, PPro-Seal™ electrofusion socket
- **Standard Pack Quantity**: 1 valve

Key Certifications

- **NSF 61**: PVC and CPVC
- **USP 25 Class VI (physiological non-toxic)**: PP
- **FDA CFR 21 177.1520**: PPn
- **CORZAN**: CPVC

Optional Features

- **Vented Ball**: For sodium hypochlorite use

Sample Specification

The Type 375 Ball Valve shall be true union and utilize a floating ball design. The ball shall be full port with two way blocking capability. The stem shall be blowout proof and utilize a double o-ring seal. The seat carrier shall be adjustable with the handle doubling as a seat carrier adjustment or removal tool. Ball seats shall have an elastomeric backing o-ring and all elastomeric seals shall be of like material. ANSI flanged versions shall meet the ANSI B16.5 150lb standard. All valves shall be tested in accordance to ISO9393 and designed to ISO16135 standards. All valves shall be manufactured under ISO9001 for Quality and ISO14001 for Environmental Management. PVC valves shall meet ASTM D1784 cell classification 12454 standards. CPVC valves shall meet ASTM D1784 cell classification 23447 standards. PPn valves shall meet ASTM D4101 standards. Valves of all materials shall be RoHS compliant.

Components

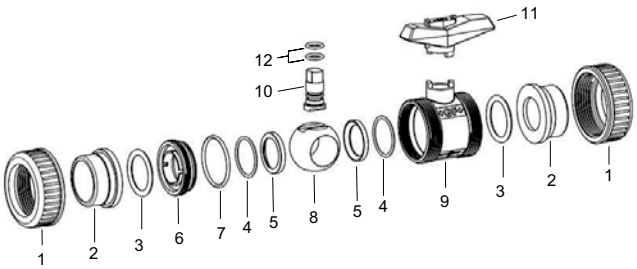

Valve Components

Part	Description	Material
1	Valve nut	PVC, CPVC or PPn
2	Valve end	PVC, CPVC, PPn or PE
3	Face seal	EPDM or FPM
4	Backing seal	EPDM or FPM
5	Seat	PTFE
6	Seat carrier	PVC, CPVC or PPn
7	Body seal	EPDM or FPM
8	Ball	PVC, CPVC or PPn
9	Body	PVC, CPVC or PPn
10	Stem	PVC, CPVC or PPn
11	Handle	Glass filled PP
12	Stem seal	EPDM or FPM

Key Design Features

An arrow is molded on the body of the Type 375 to indicate the side of the valve with a fixed seat. The valve is bidirectional, so the installation direction does not affect the valve's performance. However, the installation direction of the fixed side of the valve does provide benefits for both upstream and downstream installs. When a valve is closed, the ball seal in a pressurized system is provided by the downstream seat, it is therefore advantageous to install the valve with the fixed side downstream. Depending on system design, it can be easier to adjust the seat carrier of a valve if the fixed seat is upstream because the upstream side of the valve does not need to be depressurized.

Material Availability

Material	Range (inch)	Range (mm)
PVC	⅜-4	16-110
CPVC	⅜-2	16-63
PPn	½-2	20-63

The Type 375 stem utilizes a redundant O-ring deign to provide an added barrier against leak out. It also features an oversized base to prevent blowout.

Vented Ball: Optional Feature

A vented ball is an optional feature with all variations of the Type 375 Ball Valve. This version of the valve has dedicated part numbers that utilize a special ball with a ⅛ inch hole. This ball is designed for applications in which the media requires out-gassing such as sodium hypochlorite. The hole functions as a vent for media that would normally be trapped inside a closed ball. The vent prevents potentially dangerous pressure from building up inside the valve. The vent is located on the seat carrier side of the ball valve and this side is recommended to be installed upstream.

Chemical applications vary from system to system and variations such as concentration, temperature and pressure need to be considered. It is the responsibility of the individual user to verify compatibility and GF recommends that every application be verified and tested by internal experts or a third party.

Technical Data

Pressure Temperature Curves

The following graphs are based on a 25 year lifetime water or similar media application

PVC

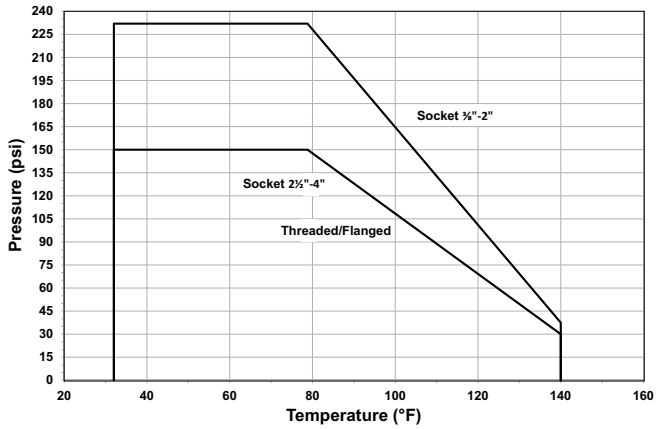

CPVC

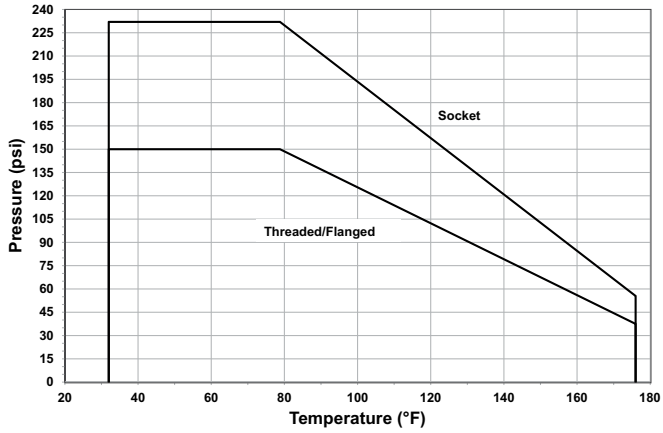

PPn

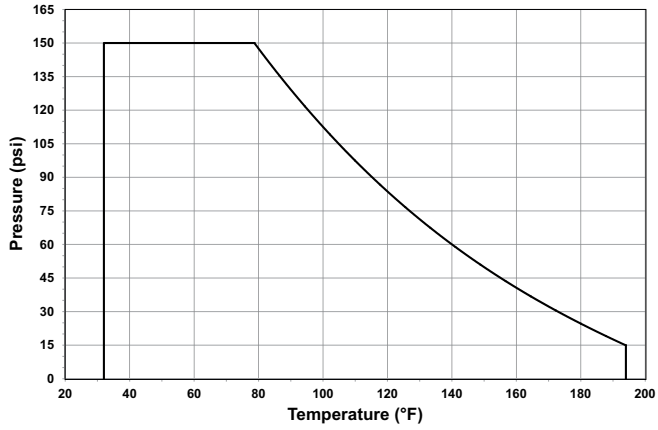

Pressure-Temperature

Material	Temperature Range (°F)	Max Pressure (psi)
PVC	32 - 140	232*
CPVC	32 - 176	232*
PPn	32 - 176	150

*Dependant on end connection as shown in P-T curves

Vacuum Service

The Type 375 is rated for full vacuum service. Maximum differential pressure of 15psi at 122°F.

Flow

The following information is based on water applications at 68° F

Cv Value

Size (inch)	d (mm)	Cv (gal/min)
½	20	15
¾	25	21
1	32	55
1¼	40	81
1½	50	126
2	63	245
2½	75	364
3	90	490
4	110	700

Flow Characteristics

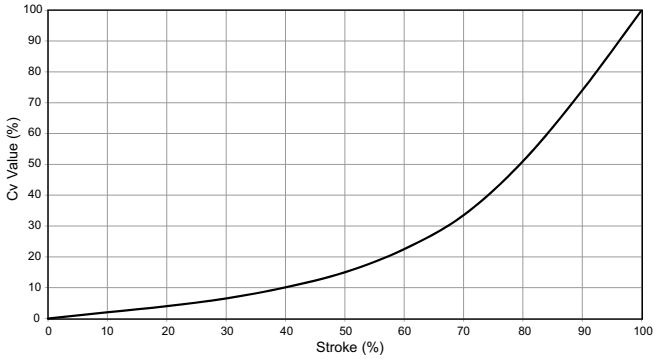

Dimensions

The following tables are shown in millimeters unless otherwise specified

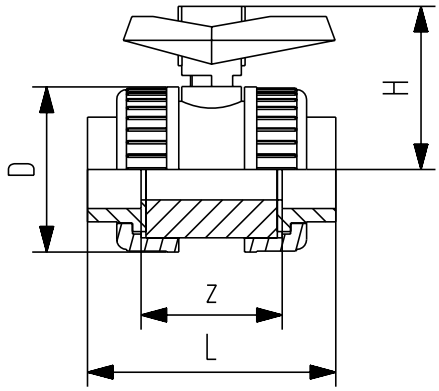

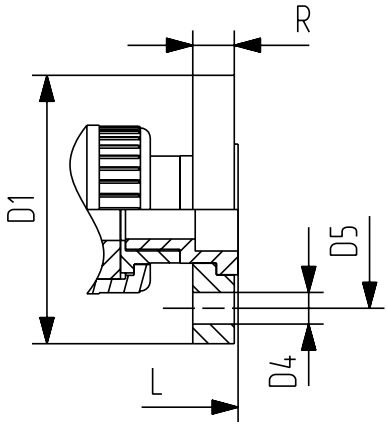

All Materials

Size (inch)	D	H
⅜	50	53
½	50	53
¾	59	60
1	68	67
1¼	80	79
1½	94	90
2	115	107
2½	145	129
3	168	143
4	210	169

PPn

Size	PPro-Seal Socket	
	L	z
½	98	47
¾	111	53
1	123	59
1½	149	80
2	171	93
3	244	144

PVC/CPVC

Size	IPS Socket		Threaded NPT		ANSI Flanged				
	L	z	L	z	L	D1 (inch)	D4 (inch)	D5 (inch)	R (inch)
⅜	83	51	73	53	-	-	-	-	-
½	91	47	89	55	135	3.5	0.5	2.38	0.57
¾	104	53	90	59	148	3.88	0.5	2.75	0.58
1	116	59	102	66	167	4.25	0.5	3.13	0.66
1¼	131	67	117	75	183	4.63	0.5	3.5	0.69
1½	149	80	127	86	206	5	0.5	3.88	0.76
2	171	93	151	98	239	6	0.63	4.75	0.82
2½	209	118	-	-	287	7	0.63	5.5	0.98
3	244	144	-	-	333	7.5	0.63	6	1.02
4	287	164	-	-	383	9	0.63	7.5	1.11

Metering Ball Valve
Type 523

General

- **Size**: ⅜"–½"
- **Material**: PVC, CPVC, PROGEF® Standard PP, SYGEF® Standard PVDF
- **Seat**: PTFE
- **Seals**: EPDM, FPM
- **End Connection**: Solvent cement socket, threaded, flanged, fusion spigot, fusion socket
- **Ball**: V-notch
- **Mounting**: Stainless steel threaded inserts

Key Certifications

- **FDA CFR 21 177.1520**: PP and PVDF
- **FDA CFR 21 177.2600**: EPDM and FPM
- **FDA CFR 21 177.1550**: PTFE
- **USP 25 Class VI (physiological non-toxic)**: PP and PVDF

Sample Specification

The Type 523 Metering Ball Valve shall be true union and utilize a floating ball design. An integrated index plate shall indicate stoke in degrees. The ball shall be fully molded with a 180° tapered V-notch groove and shall be unidirectional indicated by flow direction arrows on the index plate. The stem shall be blowout proof, utilizing a double o-ring seal and a predetermined break point opposite the media side of the stem seals. The seat carrier shall be adjustable and reverse threaded. The handle shall double as a seat carrier adjustment or removal tool. The valve nut threads shall be of buttress type. Ball seats shall have an elastomeric backing o-ring and all elastomeric seals shall be of like material. ANSI flanged versions shall meet the ANSI B16.5 150lb standard. All valves shall be tested in accordance to ISO9393 and designed to ISO16135 standards. All valves shall be manufactured under ISO9001 for Quality and ISO14001 for Environmental Management. Following assembly, every valve shall be certified bubble tight exceeding Class VI standards.

Material Specification

PVC valves shall meet ASTM D1784 cell classification 12454 standards. CPVC valves shall meet ASTM D1784 cell classification 23447 standards. PP valves shall meet ASTM D5847-14 cell classification PP0510B66851 standards. PVDF valves shall be type 1, grade 2 according to ASTM D3222 standards. Valves of all materials shall be RoHS compliant.

Components

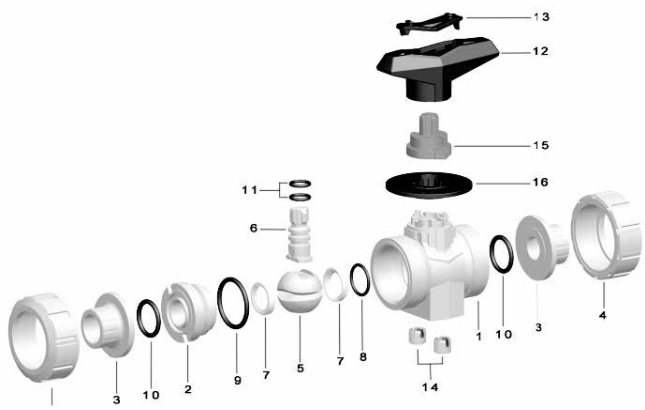

Key Design Features

The Type 523 Metering Ball Valve utilizes a 180° stroke. An integrated index plate shows the stoke in degrees with an indicator arrow attached to the valve handle. The index plate also shows correct flow direct and while it is removable, it can only be installed on the valve one way because of the design of its interface with the valve body.

Optional Features

- **Actuation**: Electric with positioner
- **Material**: ABS
- **Seals**: Alternative materials available upon request
- **Seat**: PVDF
- **End Connection**: Alternatives available upon request
- **Mounting pad**: Additional mounting option for valve base
- **Universal Adapter Kit**: ISO mount for actuation
- **Cleaned**: Silicone free/oil free

Valve Components

Part	Description	Material
1	Valve body	PVC, CPVC, PP or PVDF
2	Seat carrier	PVC, CPVC, PP or PVDF
3	Valve end	PVC, CPVC, PP, PPn, ABS, PE or PVDF
4	Valve nut	PVC, CPVC, PP or PVDF
5	Ball	PVC, CPVC, PP or PVDF
6	Stem	PVC, CPVC, PP or PVDF
7	Seat	PTFE
8	Backing seal	EPDM or FPM
9	Body seal	EPDM or FPM
10	Face seal	EPDM or FPM
11	Stem seal	EPDM or FPM
12	Handle	Glass-filled PP
13	Handle clip	Glass-filled PP
14	Mounting insert	304 Stainless steel
15	Indicator insert	Glass-filled PP
16	Index plate	Glass-filled PP

The Type 523 Metering Ball features a V-notch design. This type of ball design allows for flow control even at very low flow rates given the size of the valve. The flow characteristics curve is nearly linear because orifice size changes gradually as the valve is opened and closed. This type of V-notch design provides much better flow control, especially at low flow rates, when compared to both keyed orifices and 90° V-notch flow control balls.

Technical Data

Pressure Temperature Curves

The following graphs are based on a 25 year lifetime water or similar media application

PVC

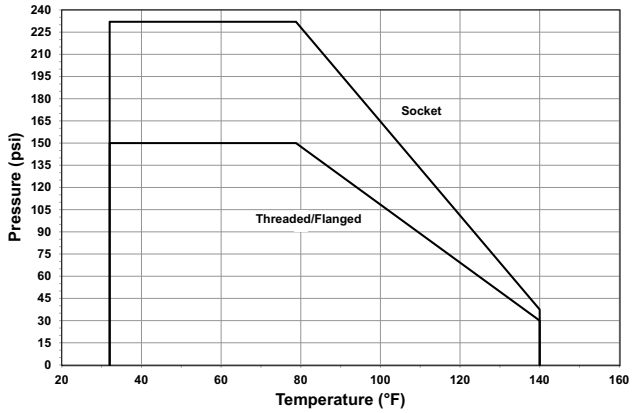

CPVC

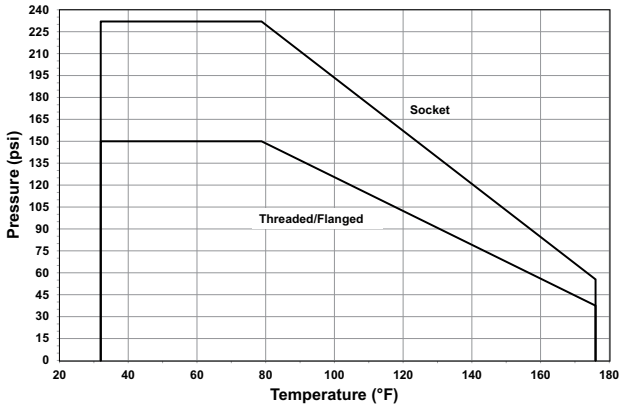

PP

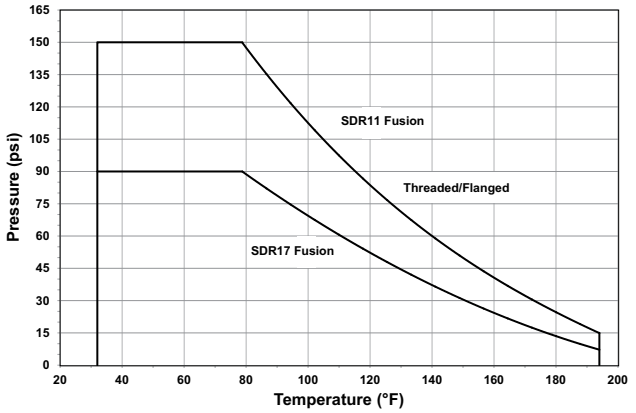

PVDF

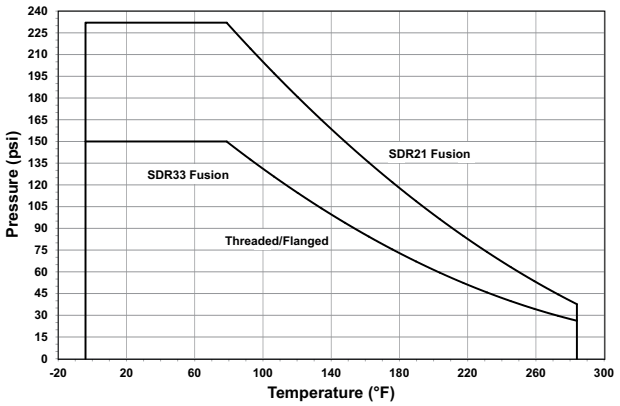

ABS: Optional Material

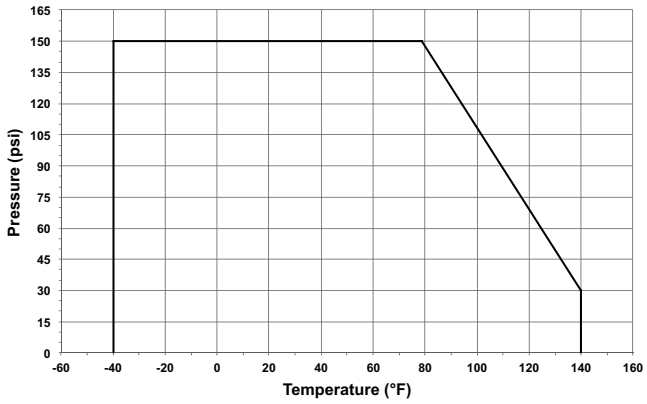

For availability, please contact GF

Pressure-Temperature

Material	Temperature Range (°F)	Max Pressure (psi)
PVC	32 to 140	232
CPVC	32 to 176	232
PP	32 to 176	150
PVDF	-4 to 284	232

Flow

The following information is based on water applications at 68° F

Flow Characteristics

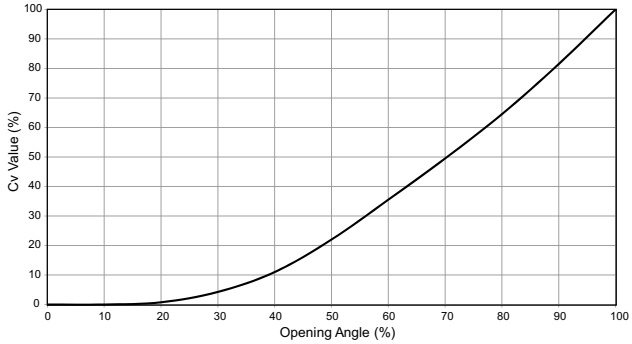

Cv Value

Size (inch)	d (mm)	Cv (gal/min)
⅜	16	0.8
½	20	1.4

Dimensions

The following tables are shown in millimeters unless otherwise specified.

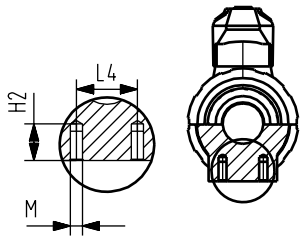

All configurations

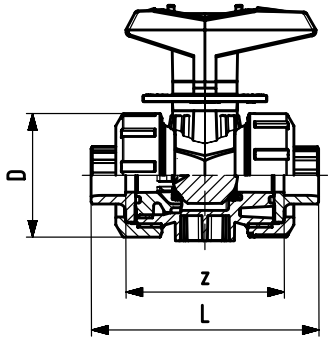

Socket/threaded

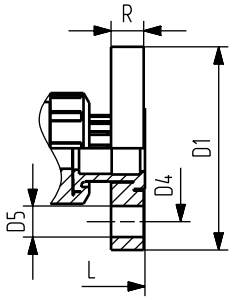

Flanged

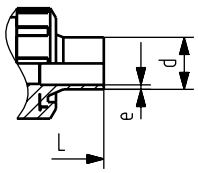

IR/butt fusion

All Materials

Size (inch)	d (mm)	D	H2	L4	M
⅜	16	50	12	25	M6
½	20	50	12	25	M6

PVC/CPVC

	IPS Socket		Threaded NPT		ANSI Flanged				
Size (inch)	L	z	L	z	L	D1 (inch)	D4 (inch)	D5 (inch)	R (inch)
⅜	105	67	98	69	-	-	-	-	-
½	105	61	98	65	149	3.5	2.38	0.5	0.57

PP

	Metric Socket		Metric IR/Butt		Threaded NPT		ANSI Flanged				
d (mm)	L	z	L	e	L	z	L	D1 (inch)	D4 (inch)	D5 (inch)	R (inch)
16	93	67	-	-	96	71	-	-	-	-	-
20	95	66	130	1.9	99	64	166	3.74	2.36	0.63	0.63

PVDF

	Metric Socket		Metric IR/Butt		Threaded NPT		ANSI Flanged				
d (mm)	L	z	L	e	L	z	L	D1 (inch)	D4 (inch)	D5 (inch)	R (inch)
16	93	67	-	-	96	69	-	-	-	-	-
20	95	66	130	1.9	99	64	174	3.74	2.36	0.63	0.63

COLORO Ball Valves
Type 353/355

General
- **Size**: ½"–2"
- **Material**: PVC
- **End Connection**: Socket, threaded
- **Seat**: PTFE
- **Seals:** EPDM
- **Handle Color**: Orange

Optional Features
- **Handle Color**: Green, yellow, black, white, blue, red

Key Certifications
- **FDA CFR 21 177.2600**: EPDM
- **FDA CFR 21 177.1550**: PTFE
- **American Bureau of Shipping (ABS)**: All materials

Connection Availability
- Type 353 COLORO Compact Ball Valve - Socket only
- Type 355 COLORO True Union Ball Valve - Socket, threaded

Sample Specification
The Type 353 and 355 COLORO Ball Valve body shall utilize a non-serviceable compact design and shall be used for open close applications only. The valve body material shall be fully molded PVC and the elastomeric seals shall be EPDM. True union and compact versions shall be available. True union versions shall utilize GF union ends, nuts and face seals. The ball shall have two way blocking capability. The ball and stem shall be fully molded one piece design and shall be encased between two IR fused body halves. The seat shall be PTFE with an EPDM backing ring. All elastomeric seals shall be of like material. The handle shall be interchangeable and be available in multiple colors. All valves shall be tested in accordance to ISO9393 and Type 355 valves shall be designed to ISO16135 standards. All valves shall be manufactured under ISO9001 for Quality and ISO14001 for Environmental Management. Following assembly, every valve shall be tested and certified bubble tight exceeding Class VI standards. PVC valves shall meet ASTM D1784 cell classification 12454 standards and shall be RoHS compliant.

Technical Data

The following graphs are based on a 25 year lifetime water or similar media application

Pressure Temperature Curve

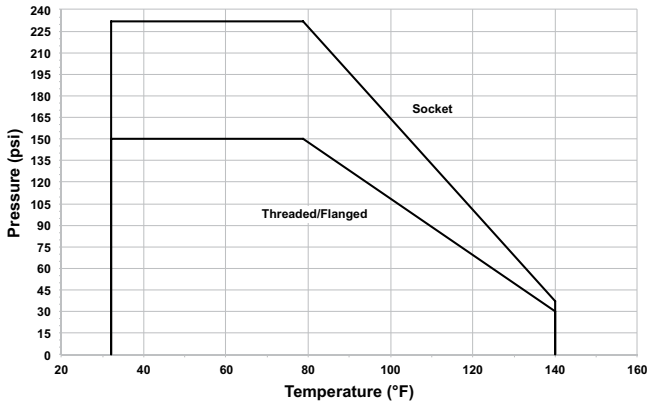

Cv Value

Size (inch)	Cv (gal/min)
⅜	5
½	13
¾	25
1	49
1¼	70
1½	112
2	217

Pressure-Temperature

Material	Temperature Range (°F)	Max Pressure (psi)
PVC	32 to 140	232*

*Dependant on end connection as shown in P-T curves

Dimensions

The following tables are shown in millimeters unless otherwise specified

353 Compact

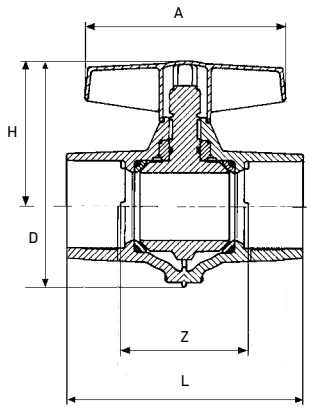

353 True Union

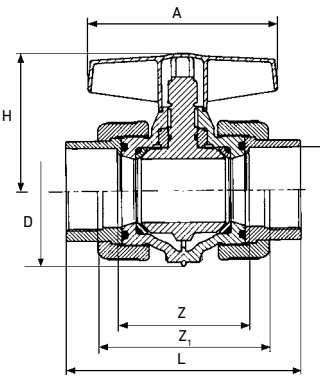

Z = socket laying length
Z_1 = threaded laying length

Size	353/355			353 IPS Socket	
	A	D	H	L	Z
½	78	75	51	77	33
¾	92	85	58	89	38
1	92	94	62	105	47
1¼	116	116	76	119	56
1½	116	128	83	136	66
2	140	157	102	160	83

Size	355 IPS Socket		355 Threaded NPT	
	L	Z	L	Z1
½	95	60	92	66
¾	107	66	104	74
1	117	69	113	79
1¼	137	80	132	94
1½	145	85	147	109
2	170	97	175	127

Three-way Ball Valve
Type 543

General

- **Size**: ⅜"–2"
- **Material**: PVC, CPVC, PROGEF® Standard PP, ABS, SYGEF® Standard PVDF
- **Seat**: PTFE
- **Seals**: EPDM or FPM
- **End Connection**: Solvent cement socket, threaded, flanged, fusion spigot, fusion socket
- **Horizontal Mounting**: Stainless steel threaded inserts
- **Horizontal Ball Port**: L-port, T-port
- **Vertical Ball Port**: L-port, diverter

Key Certifications

- **FDA CFR 21 177.1520**: PP and PVDF
- **FDA CFR 21 177.2600**: EPDM and FPM
- **FDA CFR 21 177.1550**: PTFE
- **USP 25 Class VI (physiological non-toxic)**: PP and PVDF

Sample Specification

The Type 543 3-way Ball Valve shall be available in horizontal and vertical body types. The ball shall be fully molded and full port. The L-port ball shall have blocking capability when in the OFF position. The stem shall be blowout proof, utilizing a double o-ring seal and a predetermined break point opposite the media side of the stem seals. The seat carrier shall be adjustable and reverse threaded. The handle shall double as a seat carrier adjustment or removal tool. Horizontal versions shall utilize a true union connection with a seat carrier on all three ports. Vertical versions shall utilize a true union connection and seat on the two main ports only. The branch connection on vertical versions shall be metric spigot and a metric-ASTM coupling shall be provided. The valve nut threads shall be of buttress type. Ball seats shall have an elastomeric backing o-ring and all elastomeric seals shall be of like material. All valves shall be tested in accordance to ISO9393 and designed to ISO16135 standards. All valves shall be manufactured under ISO9001 for Quality and ISO14001 for Environmental Management. Following assembly, every valve shall be certified bubble tight.

Material Specification

PVC valves shall meet ASTM D1784 cell classification 12454 standards. CPVC valves shall meet ASTM D1784 cell classification 23447 standards. PP valves shall meet ASTM D5847-14 cell classification PP0510B66851 standards. ABS valves shall meet ASTM D3965 cell classification 42222 standards. PVDF valves shall be type 1, grade 2 according to ASTM D3222 standards. Valves of all materials shall be RoHS compliant.

Material Availability

Material	Horizontal	Vertical
PVC	All Sizes	All Sizes
CPVC	All Sizes	-
PP	All Sizes	-
ABS	All Sizes	All Sizes
PVDF	All Sizes	-

Optional Features

- **Actuation**: Electric, pneumatic
- **Limit Switches**: Mechanical, inductive
- **Handle**: Lockable handle, handle extension
- **Stop**: 90°, 180° turn limiter
- **Mounting pad**: Additional mounting option for valve base
- **Universal Adapter Kit**: ISO mount for actuation
- **Seals**: Alternative materials available upon request
- **Seat**: PVDF
- **End Connection**: Alternatives available upon request
- **Cleaned**: Silicone free/oil free

Components

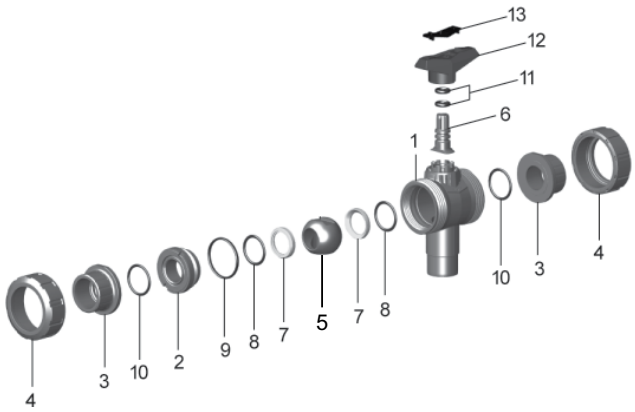

Vertical Valve Components

Part	Description	Material
1	Valve body	PVC, CPVC, PP, ABS or PVDF
2	Seat carrier	PVC, CPVC, PP, ABS or PVDF
3	Valve end	PVC, CPVC, PP, PPn, ABS, PE or PVDF
4	Valve nut	PVC, CPVC, PP, ABS or PVDF
5	Ball	PVC, CPVC, PP, ABS or PVDF
6	Stem	PVC, CPVC, PP, ABS or PVDF
7	Seat	PTFE
8	Backing seal	EPDM or FPM
9	Body seal	EPDM or FPM
10	Face seal	EPDM or FPM
11	Stem seal	EPDM or FPM
12	Handle	Glass-filled PP
13	Handle clip	Glass-filled PP

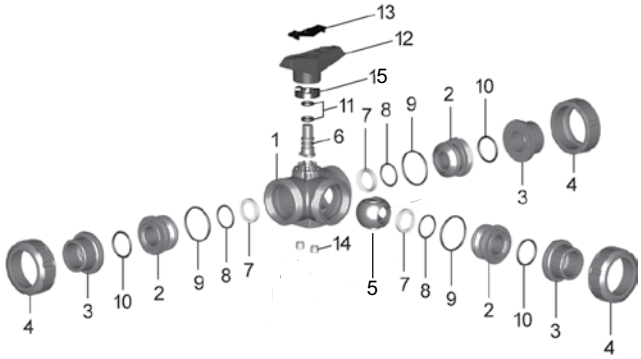

Horizontal Valve Components

Part	Description	Material
1	Valve body	PVC, CPVC, PP, ABS or PVDF
2	Seat carrier	PVC, CPVC, PP, ABS or PVDF
3	Valve end	PVC, CPVC, PP, PPn, ABS, PE or PVDF
4	Valve nut	PVC, CPVC, PP, ABS or PVDF
5	Ball	PVC, CPVC, PP, ABS or PVDF
6	Stem	PVC, CPVC, PP, ABS or PVDF
7	Seat	PTFE
8	Backing seal	EPDM or FPM
9	Body seal	EPDM or FPM
10	Face seal	EPDM or FPM
11	Stem seal	EPDM or FPM
12	Handle	Glass-filled PP
13	Handle clip	Glass-filled PP
14	Mounting insert	304 Stainless steel
15	Turn limiter	Glass-filled PP

Technical Data

Pressure Temperature Curves

The following graphs are based on a 25 year lifetime water or similar media application

PVC

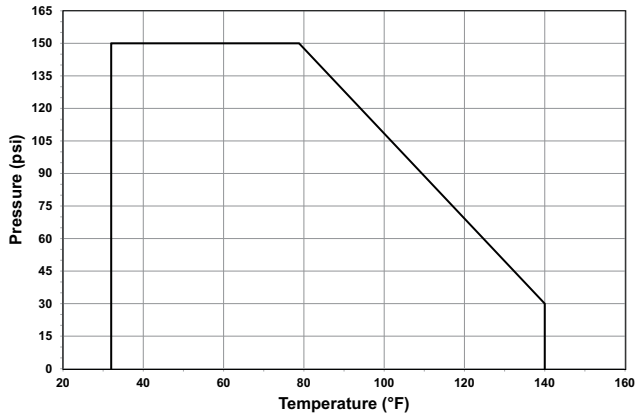

CPVC

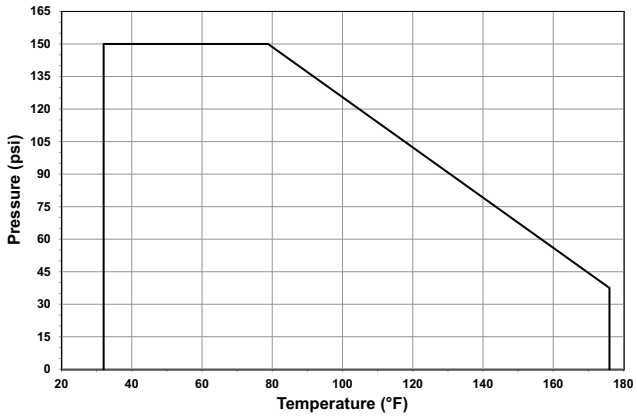

PP

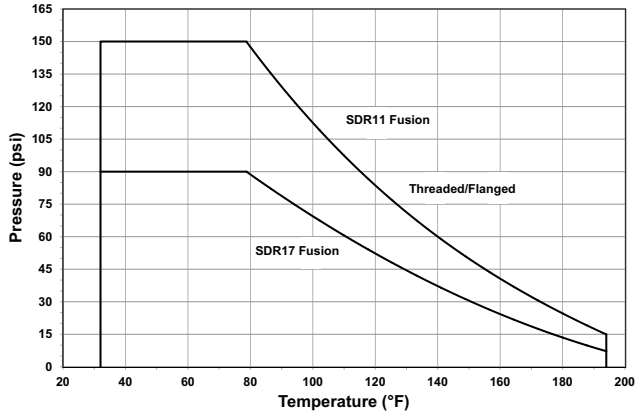

ABS

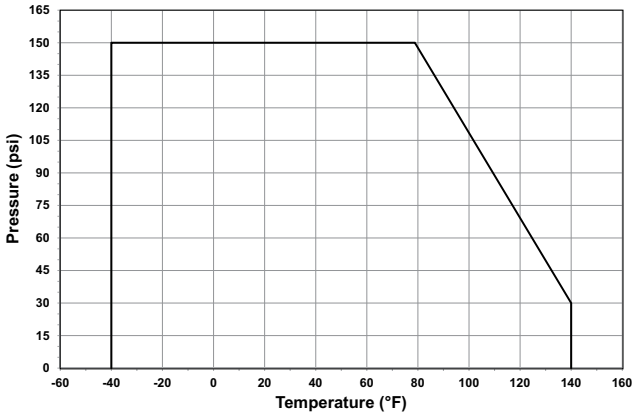

PVDF

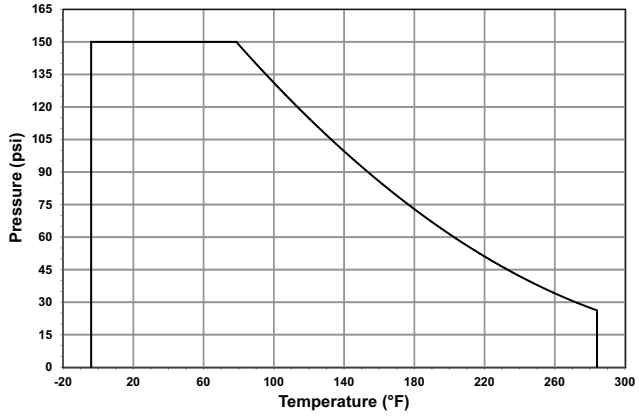

Pressure-Temperature

Material	Temperature Range (°F)	Max Pressure (psi)
PVC	32 to 140	150
CPVC	32 to 176	150
PP	32 to 176	150*
ABS	-40 to 140	150
PVDF	-4 to 284	150

*Dependant on end connection as shown in P-T curves

Vacuum Service

The Type 543 is rated for full vacuum service. Maximum differential pressure of 15psi at 122°F.

Porting

Options shown turning the valve handle clockwise. Redundant positions not shown.

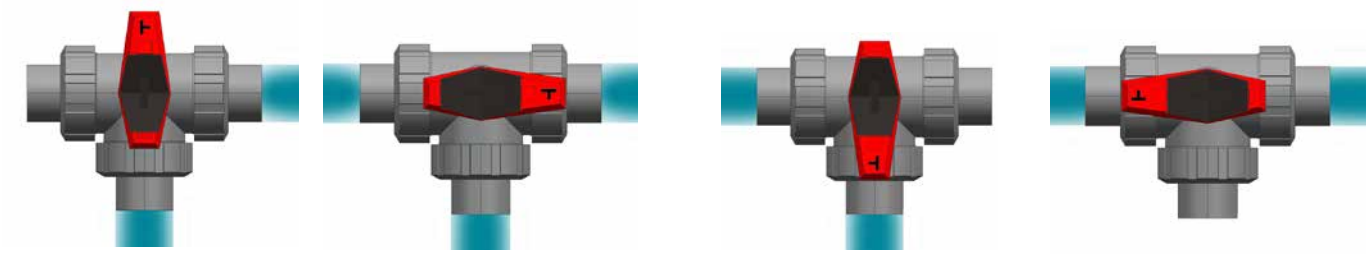

0° 90° 180° 270°

Flow Horizontal T-port

The following information is based on water applications at 68° F

Flow Characteristics: C Common (0°–360°)

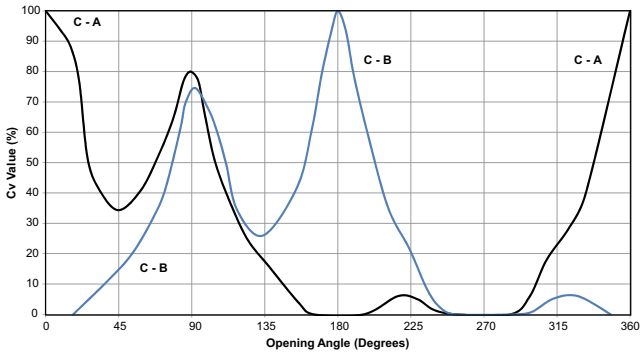

Flow Characteristics: B Common (0°–360°)

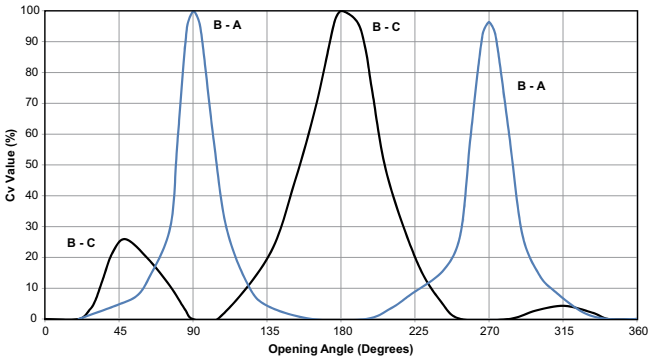

Common is referring to the single port media is flowing either to or from. The A common curve is the same as the B common shifted 180 degrees. Any opening angle with points on both lines indicates flow through both non-common ports.

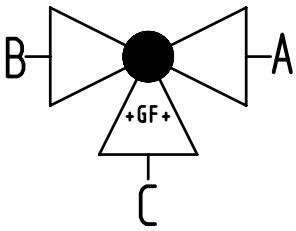

Cv Value (gal/min)

Size (inch)	d (mm)	A-B	C-B or C-A	B-C or A-C
⅜	16	9.8	2.5	2.8
½	20	14	3.5	4.9
¾	25	32.9	9.1	10.5
1	32	55.5	14	17.5
1¼	40	90.3	26.6	32.9
1½	50	133.7	32.9	42
2	63	217	62.3	84.7

Flow Characteristics: C Common (45°–135°)

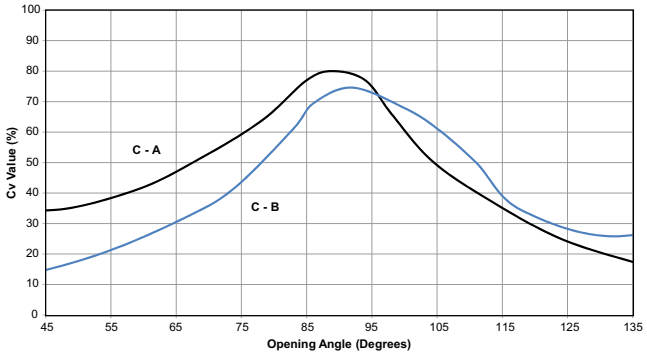

Flow Characteristics: B Common (0°–90°)

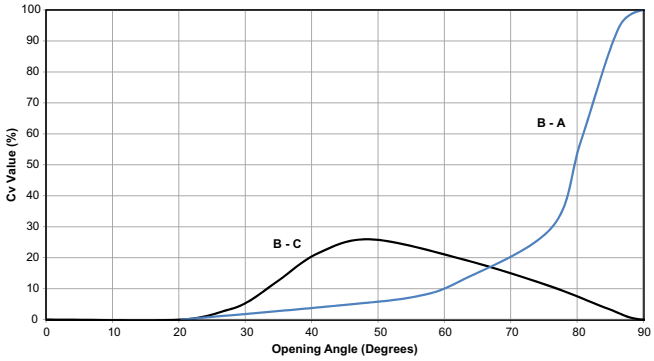

Porting Horizontal L-port

Options shown turning the valve handle clockwise. Redundant positions not shown.

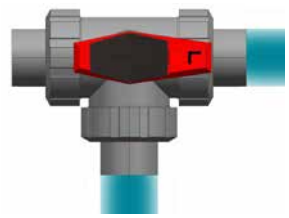

0°

45°

90°

180°

225°

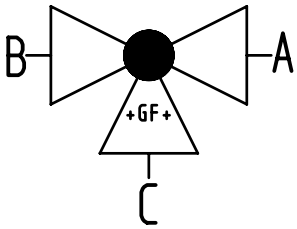

Flow Horizontal L-port

The following information is based on water applications at 68° F

Flow Characteristics: C Common (0°–90°)

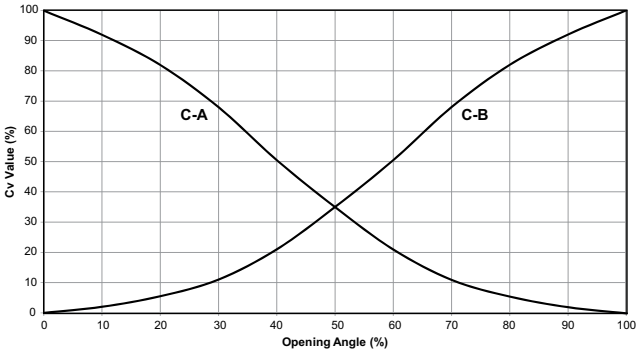

Flow Characteristics: B Common (0°–360°)

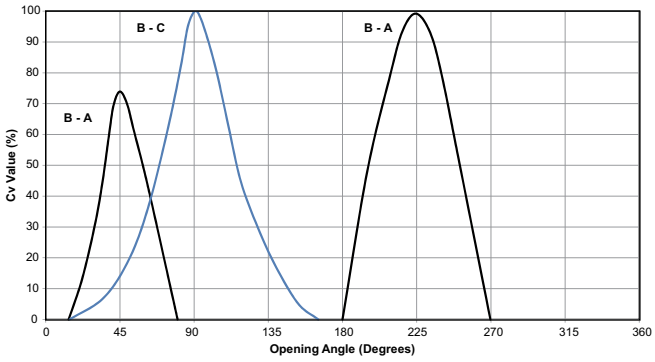

Common is referring to the single port media is flowing either to or from. The A common curve is the same as the B common shifted 180 degrees. Any opening angle with points on both lines indicates flow through both non-common ports.

Cv Value (gal/min)

Size (inch)	d (mm)	A-B	C-B or C-A	B-C or A-C
⅜	16	0.7	3.5	3.5
½	20	1.1	4.5	4.5
¾	25	2.1	10.5	10.5
1	32	3.5	19.6	19.6
1¼	40	6.3	33.6	33.6
1½	50	7.7	43.4	43.4
2	63	15.4	86.1	86.1

Flow Characteristics: B Common (0°–90°)

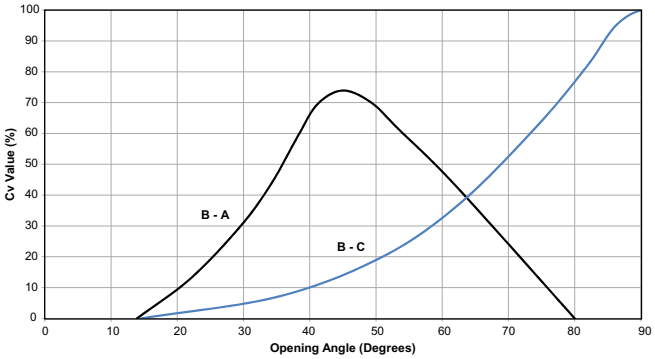

Porting Vertical

Options shown turning the valve handle clockwise. Redundant positions not shown.

Vertical L-port

0°

90°

180°

270°

Vertical Diverter

0°

45°

90°

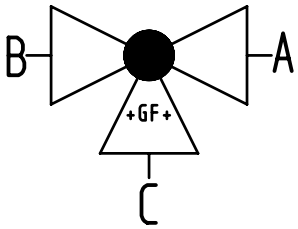

Flow Vertical

The following information is based on water applications at 68° F

Flow Characteristics: L-Port, C↔A (90°–180°)

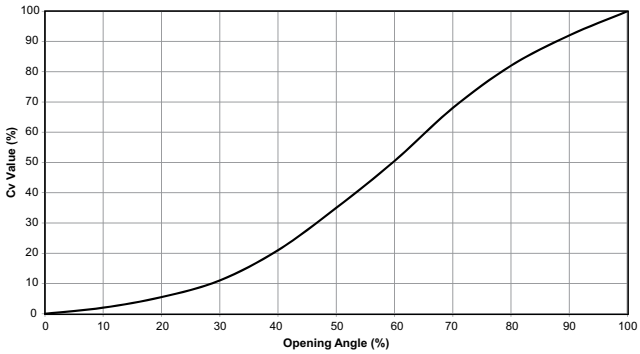

Flow Characteristics: Diverter

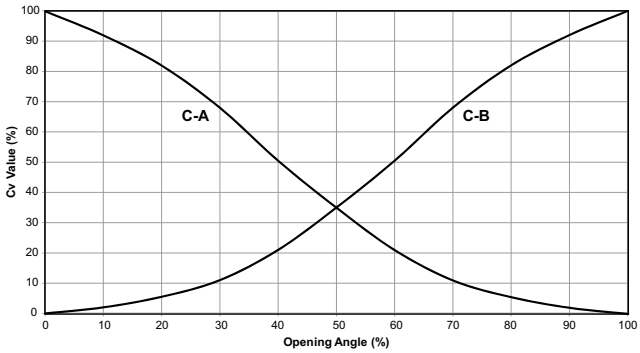

Flow Characteristics: L-Port, C↔B (0°–90°)

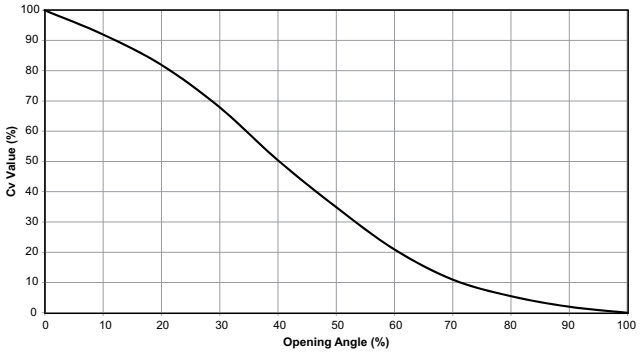

Cv Value (gal/min)

Size (inch)	d (mm)	A-C or B-C
⅜	16	3.5
½	20	5.3
¾	25	10.5
1	32	19.6
1¼	40	33.6
1½	50	43.4
2	63	86.1

Dimensions

The following tables are shown in millimeters unless otherwise specified

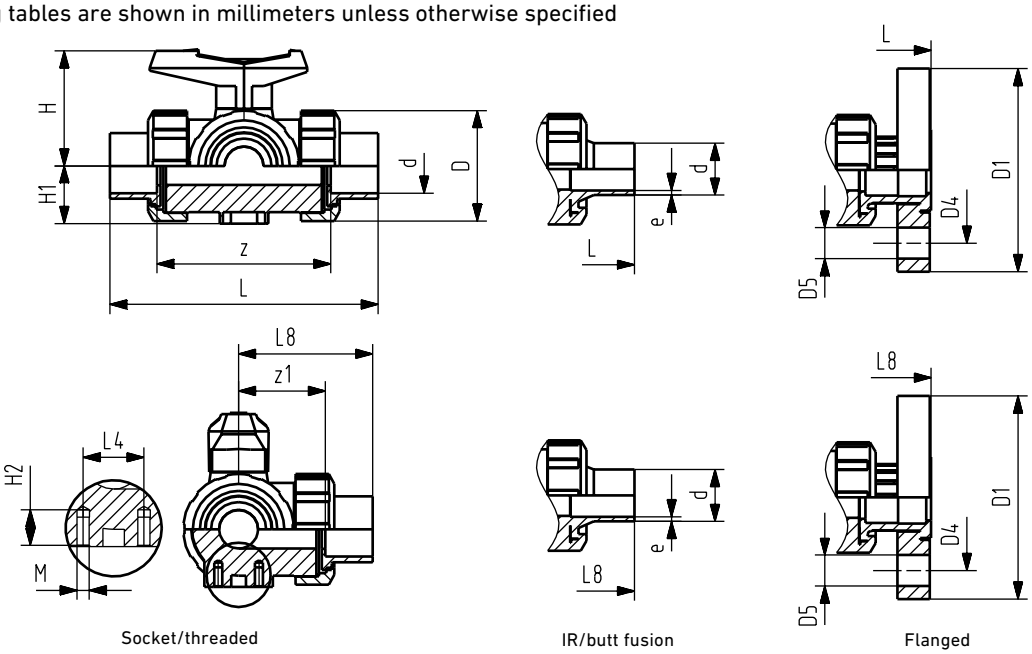

Socket/threaded

IR/butt fusion

Flanged

Type 543 Horizontal: All Materials

Size (inch)	d (mm)	D	L4	H	H1	H2	M
⅜	16	50	25	57	28	8	M6
½	20	50	25	57	28	8	M6
¾	25	58	25	67	32	8	M6
1	32	68	25	73	36	8	M6
1¼	40	84	45	90	45	9	M8
1½	50	97	45	97	51	9	M8
2	63	124	45	116	65	9	M8

Type 543 Horizontal: ABS

d (mm)	Metric Socket			
	L	L8	z	z1
16	109	54	81	40
20	112	56	81	40
25	131	65	94	47
32	151	75	107	54
40	181	90	130	65
50	205	103	143	72
63	261	130	185	92

Type 543 Horizontal: PVC/CPVC

Size (inch)	IPS Socket				Threaded NPT				Flanged					
	L	L8	z	z1	L	L8	z	z1	L	L1	D1 (inch)	D4 (inch)	D5 (inch)	R (inch)
⅜	123	61	85	42	115	57	87	43	-	-	-	-	-	-
½	122	61	77	38	114	57	81	40	161	80	3.5	2.38	0.50	0.57
¾	141	71	92	46	131	66	96	48	182	91	3.88	2.75	0.50	0.58
1	161	81	105	53	155	78	111	56	208	104	4.25	3.13	0.50	0.66
1¼	187	93	126	63	181	90	134	67	238	119	4.63	3.5	0.50	0.69
1½	213	107	143	72	205	103	159	80	265	133	5	3.88	0.50	0.76
2	261	130	185	92	261	130	213	106	323	161	6	4.75	0.63	0.82

Type 543 Horizontal: PP/PVDF

d (mm)	Metric Socket				Metric IR/Butt				Threaded NPT			
	L	L8	z	z1	L	L8	e (PP)	e (PVDF)	L	L8	z	z1
16	110	55	82	41	-	-	-	-	112	56	86	43
20	112	56	82	41	146	73	1.9	1.9	114	57	80	40
25	129	65	97	49	163	82	2.3	1.9	131	66	95	48
32	146	73	110	55	178	89	2.9	2.4	154	77	110	55
40	170	85	132	66	204	102	3.7	2.4	180	90	132	66
50	193	98	151	76	237	120	4.6	3.0	203	103	157	79
63	244	123	188	94	296	149	5.8	3.0	258	130	210	105

Dimensions

The following tables are shown in millimeters unless otherwise specified

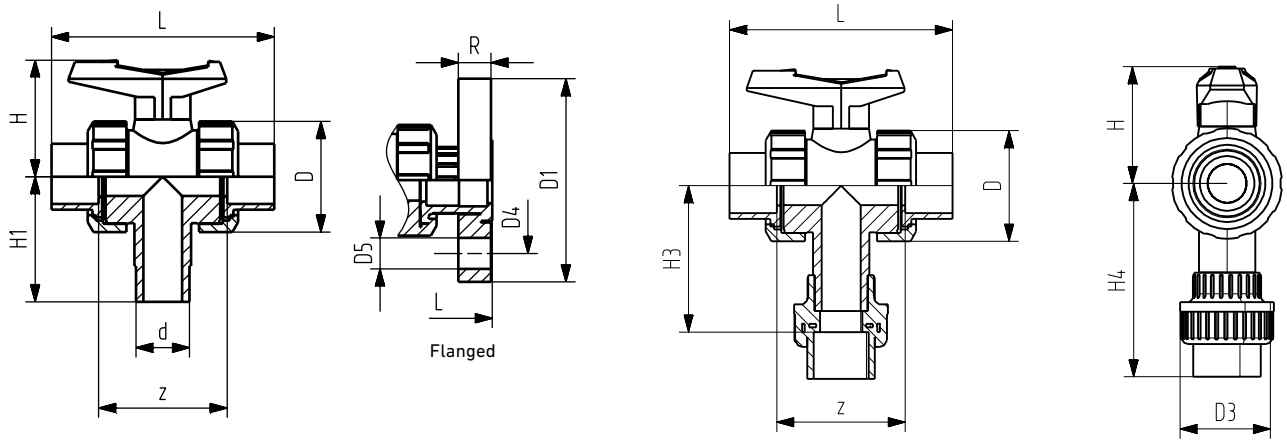

Type 543 Vertical: All Materials

Size (inch)	d (mm)	D	D3	H	H1
⅜	16	50	35	57	62
½	20	50	43	57	62
¾	25	58	51	67	72
1	32	68	58	73	77
1¼	40	84	72	90	87
1½	50	97	83	97	97
2	63	124	100	116	112

Type 543 Vertical: PVC

Size (inch)	IPS Socket				Threaded NPT			
	L	z	H3	H4	L	z	H3	H4
⅜	106	67	89	108	98	70	90	103
½	105	61	90	112	98	64	90	107
¾	121	70	103	128	112	76	105	123
1	133	76	112	141	127	83	114	135
1¼	152	90	125	157	146	99	132	155
1½	165	94	138	173	157	111	154	177
2	183	107	156	194	183	135	187	211

Type 543 Vertical: ABS

	Metric Socket	
d (mm)	L	z
16	92	64
20	95	64
25	111	74
32	123	79
40	146	95
50	157	95
63	183	107

Type 543 Vertical: PVC

	ANSI Flanged				
Size (inch)	L	D1 (inch)	D4 (inch)	D5 (inch)	R (inch)
½	149	3.5	2.38	0.5	0.57
¾	165	3.88	2.75	0.5	0.58
1	184	4.25	3.13	0.5	0.66
1¼	206	4.63	3.5	0.5	0.69
1½	221	5	3.88	0.5	0.76
2	251	6	4.75	0.63	0.82

Wafer Style Butterfly Valve
Type 567

General

- **Size**: 2"–12"
- **Outer Body**: Glass-filled PP
- **Material**: PVC, CPVC, PROGEF® Standard PP, ABS, SYGEF® Standard PVDF
- **Seals**: EPDM, FPM, PTFE/FPM
- **Stem**: 316 stainless steel
- **Operation**: Bare shaft, lever, gear
- **Connection**: Both ANSI 150 and DIN 2501
- **Standard Pack Quantity**: 1 valve

Key Certifications

- **NSF 61**: PVC and CPVC
- **FDA CFR 21 177.1520**: PP and PVDF
- **FDA CFR 21 177.2600**: EPDM and FPM
- **FDA CFR 21 177.1550**: PTFE
- **USP Class VI (physiological non-toxic)**: EPDM, FPM, PTFE, PP and PVDF

Sample Specification

The Type 567 Butterfly Valve shall be wafer style compatible with both ANSI B16.5 150 lb and DIN 2501 flange patterns. The disk operation shall utilize double eccentric design principles. The shaft shall be non-wetted by a bushing assembly with double O-ring seals and fixed at both ends. The face seal shall be a Q-ring compatible with flat and serrated flange adapters. The face, disk and shaft seals shall operate independently. The wetted body and disk shall be of like materials. Valves shall be rated for bidirectional use. The handle shall be lockable with standard adjustment increments of 5 degrees. The operator mounting flange shall be comply with ISO standards. All valves shall be tested in accordance to ISO9393 and designed to ISO16136 standards. All valves shall be manufactured under ISO9001 for Quality and ISO14001 for Environmental Management. Following assembly, every valve shall be tested and certified bubble tight exceeding Class VI standards.

Material Specification

PVC valves shall meet ASTM D1784 cell classification 12454 standards. CPVC valves shall meet ASTM D1784 cell classification 23447-B standards. PP valves shall meet ASTM D5847-14 cell classification PP0510B66851 standards. ABS valves shall meet ASTM D3965 cell classification 42222 standards. PVDF valves shall be type 1, grade 2 according to ASTM D3222 standards. Valves of all materials shall be RoHS compliant.

Components

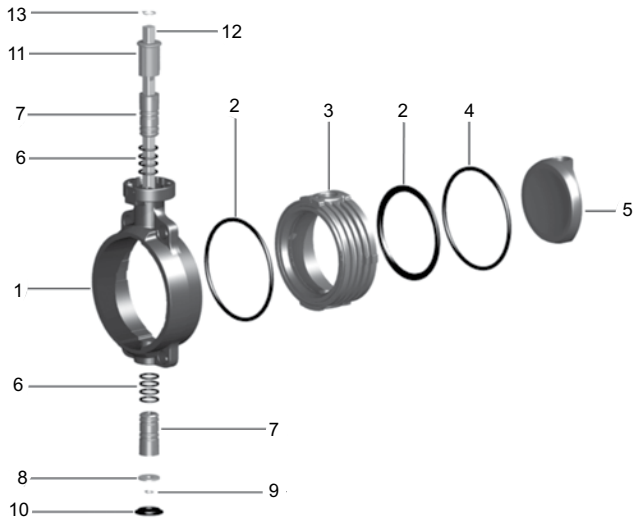

Optional Features

- **Actuation**: Electric, pneumatic
- **Limit Switches**: Mechanical, inductive
- **Handle**: Find adjustment lever (1°)
- **Stem Extension**: Two piece stainless steel
- **Shaft**: Titanium, Hastelloy-C
- **Operation**: Chain operator, square operating nut
- **Gear Operator**: Stainless steel housing
- **Hardware**: Alternatives available upon request
- **Cleaned**: Silicone free/oil free

Valve Components

Part	Description	Material
1	Outer body	Glass filled PP
2	Face seal	EPDM or FPM
3	Inner body	PVC, CPVC, PP, ABS or PVDF
4	Disk seal	EPDM, FPM or PTFE/FPM
5	Disk	PVC, CPVC, PP, ABS or PVDF
6	Shaft seal	EPDM or FPM
7	Shaft bushing	PVC, CPVC, PP, or PVDF
8	Washer	304 stainless steel
9	Lower retaining clip	304 stainless steel
10	Shaft cap	Glass filled PP
11	End stop	Glass filled PP
12	Shaft	316 stainless steel
13	Upper retaining clip	304 stainless steel

Material Availability

Material	Range (inch)	Range (mm)
PVC	2-16	63-400
CPVC	2-12	63-315
PP	2-24	63-630
ABS	2-12	63-315
PVDF	2-12	63-315

It is not possible to use inner housings with disks of different material. Valves of all sizes and materials are available with both EPDM and FPM seals. Only CPVC, PP and PVDF valves are available with PTFE encapsulated FPM disc seals. GF does not offer disc seals that deviate from their standard product offering.

Key Design Features

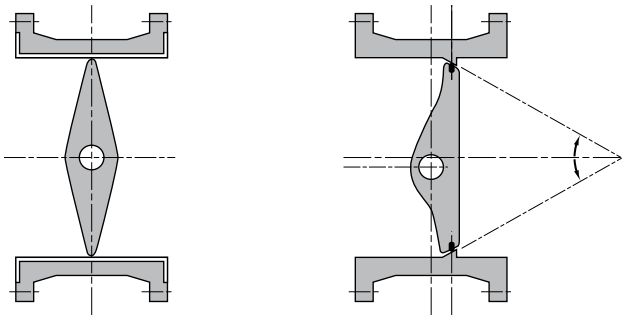

Centric Double Eccentric

Double Eccentric Design Principle

The Type 567 Butterfly Valve is designed using the double eccentric disc principle. When opening and closing, the disc is not in contact with the seat, significantly reducing component wear. This design principle greatly reduces the operating torque and required elastomeric sealing material. The reduction in sealing material decreases the impact of elastomeric swelling. The benefits of double eccentric valves include ease of manual usage, reduction in required actuator torque and extended valve lifetime.

Key Design Features

Seals

The Type 567 Butterfly Valve features a truly non-wetted shaft design. The shaft is sealed with a bushing assembly on either side of the disc. Each bushing utilizes a double o-ring seal totalling eight shaft seals in every valve.

Alternative o-ring shaft sealing designs are commonly found in competitive boot style thermoplastic butterfly valves. However, these solutions often rely upon elastomer on elastomer seals which can be unreliable, especially in chemical process applications or when working temperatures deviate from standard conditions. The Type 567 shaft seal design eliminates the need elastomer on elastomer seals, providing an industry tested dynamic double o-ring seal against a ridged thermoplastic surface.

The shaft, disc and face seals all operate independently from one another. This eliminates issues common to booted style centric valves such as crimping, where the compression of the valve between two flanges causes the boot to ripple. This can lead to increased operating torque and wear, ultimately reducing the useful life of the valve.

PTFE Disc Seal

The Type 567 Butterfly Valve is available with a PTFE encapsuled FPM disc seal. The FPM core provides flexibility to the PTFE shell and allows for a reliable seal. The double eccentric design limits the amount of PTFE required. The face and shaft seals are FPM blended with approximately 15% PTFE.

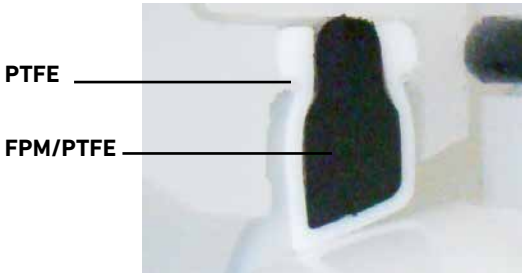

Technical Data

Pressure-Temperature Curves

The following graphs are based on a lifetime of 25 years of water or similar media applications

PVC

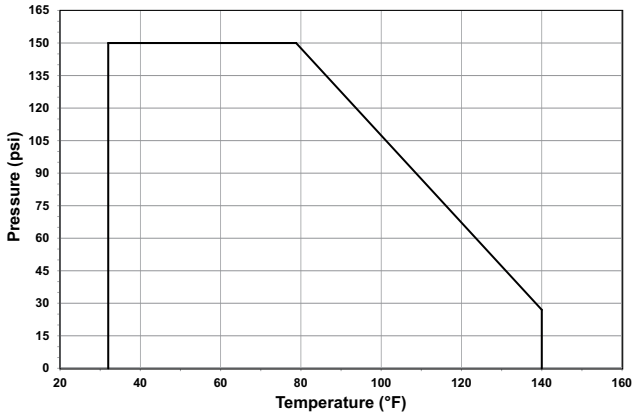

CPVC

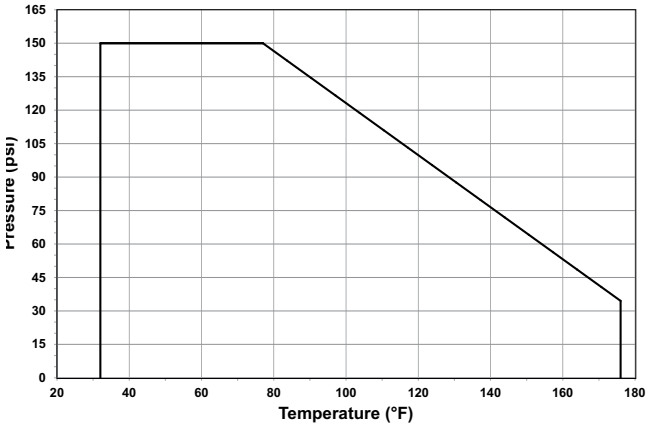

PP

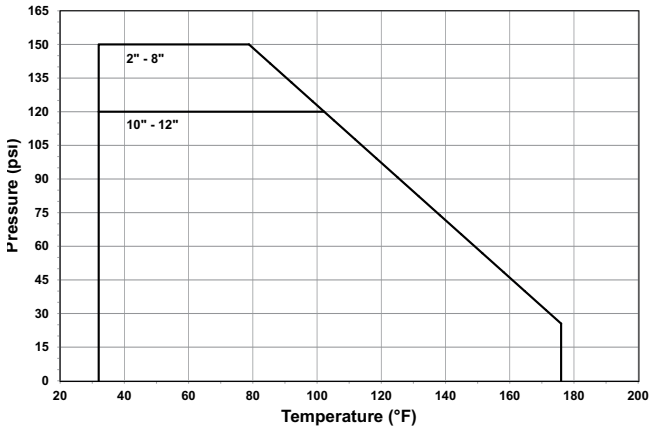

ABS

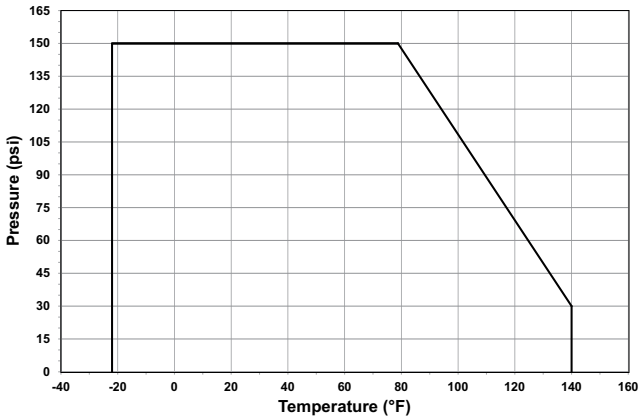

PVDF

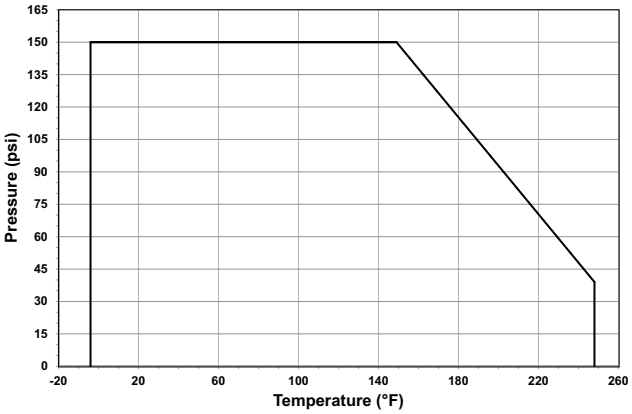

Pressure-Temperature

Material	Temperature Range (°F)	Max Pressure (psi)
PVC	32 to 140	150
CPVC	32 to 176	150
PP	32 to 176	150*
ABS	-40 to 140	150
PVDF	-4 to 284	150

*Dependant on size as shown in P-T curves

Vacuum Service

The Type 567 is rated for full vacuum service. Maximum differential pressure of 15psi at 122°F.

Flow

The following graphs are based on a lifetime of 25 years of water or similar media applications

Flow Characteristics

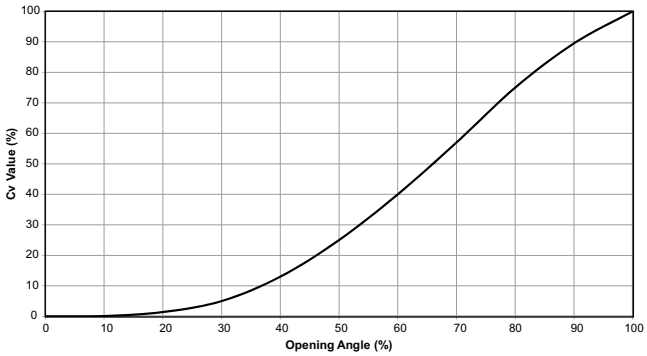

Cv Value

Size (inch)	d (mm)	Cv (gal/min)
2	63	103
2½	75	154
3	90	210
4	110	455
5	140	805
6	160	1162
8	225	2772
10	280	3570
12	315	5110

Breakaway Torque

The following tables show average values at nominal pressure

Size (inch)	d (mm)	At 75psi Torque (ft-lb)	At 150psi Torque (ft-lb)
2	63	10	25
2½	75	10	30
3	90	20	45
4	110	30	60
5	140	40	75
6	160	50	90
8	225	75	120
10	280	100	170
12	315	130	220

For non-GF actuators, a safety factor should be used in calculating the required actuator torque. This safety factor can vary depending on the application conditions and end user's preference. (e.g. control time, medium, temperature, etc.).

Operator Components

Lever

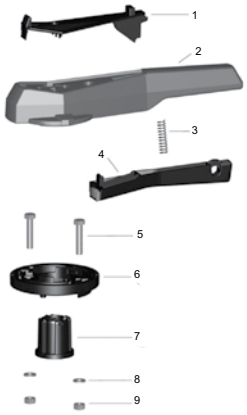

Lever Components

Part	Description	Material
1	Handle clip	Glass-filled PP
2	Handle	Glass-filled PP
3	Spring	304 Stainless steel
4	Lever	Glass-filled PP
5	Bolts	304 Stainless steel
6	Index plate	Glass-filled PP
7	Turn limiter	Glass-filled PP
8	Washers	304 Stainless steel
9	Nuts	304 Stainless steel

Gear Operator

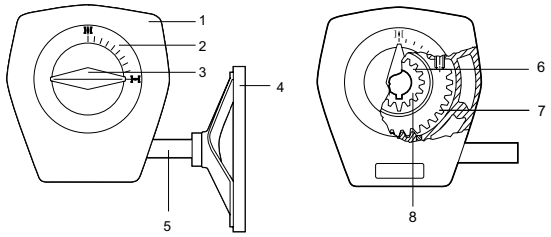

Gear Components

Part	Description	Material
1	Housing	Aluminum
2	Indicator cap	PE
3	Indicator	PE
4	Handle	Aluminum
5	Wormshaft	Nitempered steel
6	Drive bushing	Sintered copper steel
7	Quadrant	Sintered copper steel
8	Thrust bearing	Type AXK

Dimensions

The following tables are shown in millimeters unless otherwise specified

Bare Shaft

Size (inch)	ISO	D3	D4	H3	H4	H5
2	F07	70	90	27	23	11
2½	F07	70	90	27	23	11
3	F07	70	90	27	23	11
4	F07	70	90	16	23	14
5	F07	70	90	16	23	14
6	F07	70	90	19	23	17
8	F07	70	90	19	23	17
10	F10	102	125	40	23	22
12	F10	102	125	40	23	22

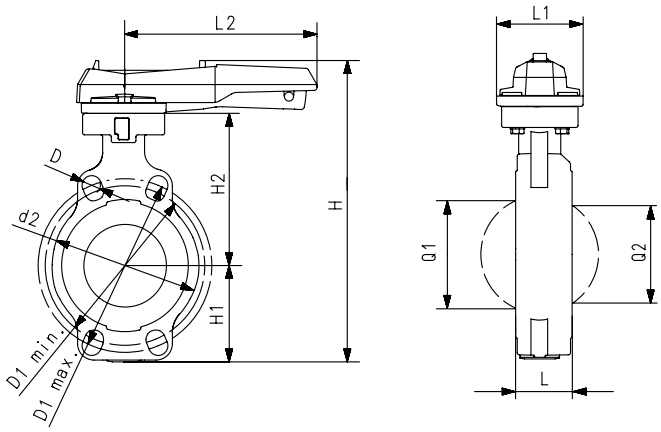

Lever

Size (inch)	d (mm)	d2	D	D1 min	D1 max	D2	H	H1	H2	L	L1	L2	Q1	Q2
2	63	104	19	120	125	104	264	77	134	45	106	205	40	-
2½	75	115	19	140	145	115	277	83	140	46	106	205	54	35
3	90	131	19	150	160	131	289	89	146	49	106	205	67	50
4	110	161	19	175	191	161	325	104	167	56	106	255	88	74
5	140	187	23	210	216	187	352	117	181	64	106	255	113	97
6	160	215	24	241	241	215	373	130	189	72	106	255	139	123
8	225	267	23	290	295	267	435	158	210	73	140	408	178	169
10	280	329	25	353	362	329	554	205	264	113	149	408	210	207
12	315	379	25	400	432	379	598	228	285	113	149	408	256	253

Gear

Size (inch)	d (mm)	D3	H3	L1	L2	L3
2	63	160	62	78	112	179
2½	75	160	62	78	112	179
3	90	160	62	78	112	179
4	110	160	62	78	112	179
5	140	160	62	78	112	179
6	160	160	62	78	112	179
8	225	160	62	78	112	179
10	280	200	69	97	130	198
12	315	200	69	97	130	198

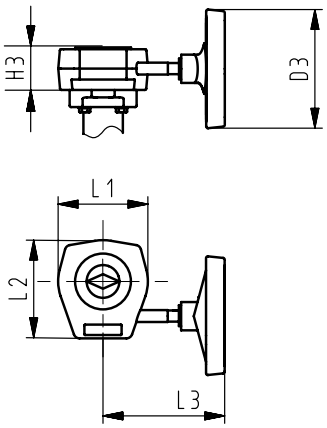

Wafer Style Butterfly Valve

Type 567 LD

General

- **Size**: 14"–24"
- **Material**: PVC, PP
- **Seals**: EPDM, FPM
- **Stem**: 304 stainless steel
- **Operation**: Bare shaft, gear
- **Connection**: Both ANSI 150 and DIN 2501
- **Standard Pack Quantity**: 1 valve

Key Certifications

- **FDA CFR 21 177.1520**: PP
- **FDA CFR 21 177.2600**: EPDM and FPM
- **USP Class VI (physiological non-toxic)**: EPDM, FPM and PP

Sample Specification

The Type 567 Butterfly Valve shall be wafer style compatible with both ANSI B16.5 150 lb and DIN 2501 flange patterns. The disk operation shall utilize double eccentric design principles. The shaft shall be non-wetted by a bushing assembly with double O-ring seals and fixed at both ends. The face seal shall be a O-ring compatible with flat and serrated flange adapters. The face, disk and shaft seals shall operate independently. The wetted body and disk shall be of like materials. Valves shall be rated for bidirectional use. The operator mounting flange shall be comply with ISO standards. All valves shall be tested in accordance to ISO9393 and designed to ISO16136 standards. All valves shall be manufactured under ISO9001 for Quality and ISO14001 for Environmental Management. Following assembly, every valve shall be tested and certified bubble tight exceeding Class VI standards.

Material Specification

PVC valves shall meet ASTM D1784 cell classification 12454 standards. PP valves shall meet ASTM D5847-14 cell classification PP0510B66851 standards. Valves of all materials shall be RoHS compliant.

Optional Features

- **Actuation**: Electric, pneumatic
- **Limit Switches**: Mechanical, inductive
- **Stem Extension**: Two piece stainless steel
- **Operation**: Chain operator, square operating nut
- **Gear Operator**: Stainless steel housing
- **Hardware**: Alternatives available upon request

Components

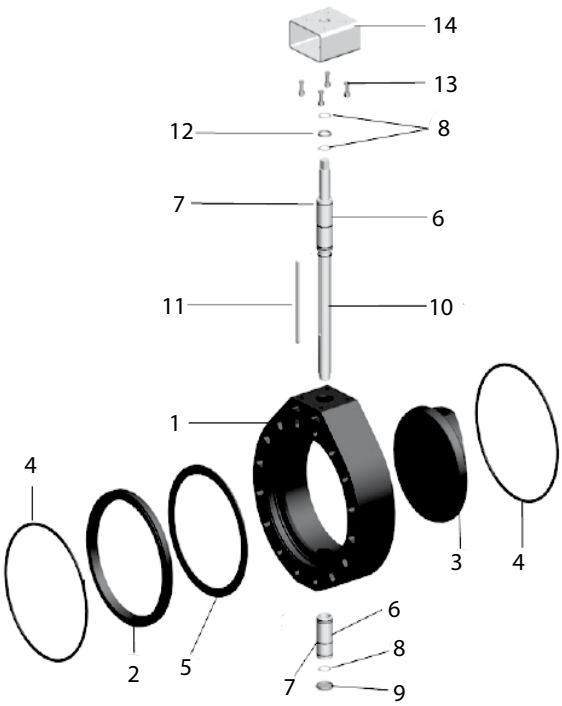

Valve Components

Part	Description	Material
1	Body	PVC or PP
2	Compression ring	PVC or PP
3	Disk	PVC or PP
4	Face seal	EPDM or FPM
5	Disk seal	EPDM or FPM
6	Shaft bushing	PVC or PP
7	Shaft seal	EPDM or FPM
8	Retaining clip	304 stainless steel
9	Shaft cap	Glass-filled PP
10	Shaft	304 stainless steel
11	Shaft key	304 stainless steel
12	Washer	304 stainless steel
13	Mounting pad bolts	304 stainless steel
14	Mounting pad	304 stainless steel

Material Availability

Material	Range (inch)	Range (mm)
PVC	14-16	355-400
PP	14-24	355-630

Alternative Configurations

It is not possible to use inner housings with disks of different material. GF does not offer disc seals that deviate from their standard product offering.

Key Design Features

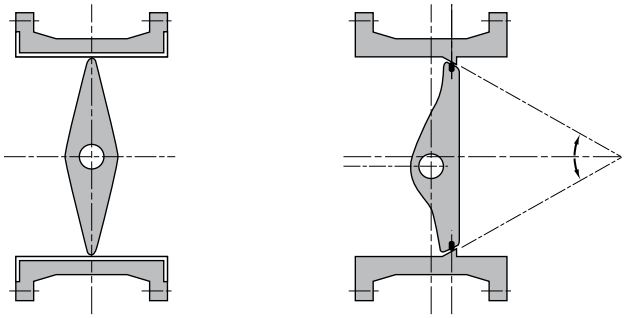

Centric

Double Eccentric

Double Eccentric Design Principle

The Type 567 Butterfly Valve is designed using the double eccentric disc principle. When opening and closing, the disc is not in contact with the seat, significantly reducing component wear. This design principle greatly reduces the operating torque and required elastomeric sealing material. The reduction in sealing material decreases the impact of elastomeric swelling. The benefits of double eccentric valves include ease of manual usage, reduction in required actuator torque and extended valve lifetime.

Technical Data

Pressure-Temperature Curves

The following graphs are based on a lifetime of 25 years of water or similar media applications

PVC

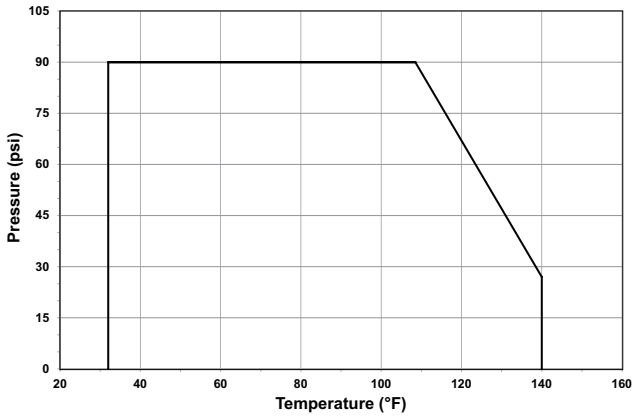

PP

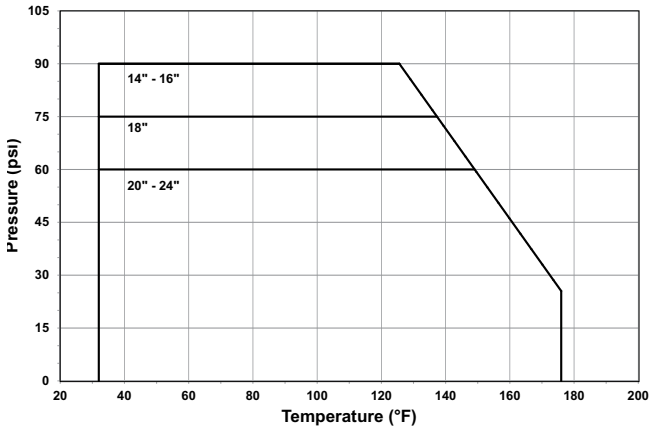

Vacuum Service

The Type 567 is rated for full vacuum service. Maximum differential pressure of 15psi at 122°F.

Pressure-Temperature

Material	Temperature Range (°F)	Max Pressure (psi)
PVC	32 to 140	90*
PP	32 to 176	90*

*Dependant on size as shown in P-T curves

Flow

The following information is based on water applications at 68° F

Flow Characteristics

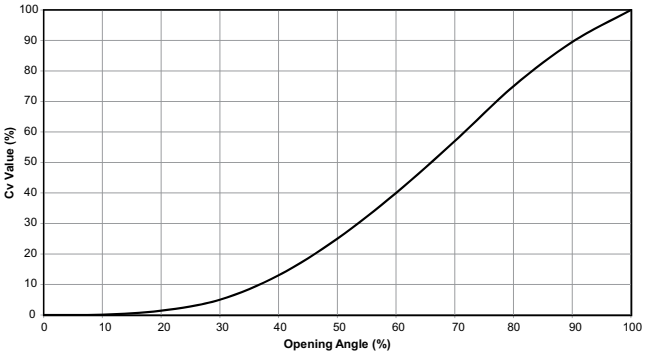

Cv Value

Size (inch)	d (mm)	Cv (gal/min)
14	355	6300
16	400	8050
18	450	10850
20	500	14280
24	630	18550

Breakaway Torque

The following tables show average values at nominal pressure

Size (inch)	d (mm)	At 75psi Torque (ft-lb)	At 150psi Torque (ft-lb)
14	355	170	310
16	400	250	400
18	450	330	580
20	500	400	615
24	630	560	860

For non-GF actuators, a safety factor should be used in calculating the required actuator torque. This safety factor can vary depending on the application conditions and end user's preference. (e.g. control time, medium, temperature, etc.).

Weight

The following table shows unpacked valve weight

Size (inch)	Size (inch)	Weight (lb)
14	355	99
16	400	121
18	450	132
20	500	165
24	630	242

Valve weights shown are bare shaft and are approximate.
Gear operator weight is 3 lb.

Operator Components

Gear Operator

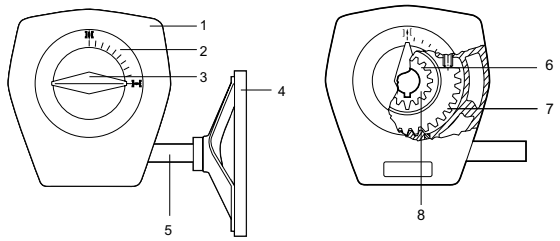

Gear Components

Part	Description	Material
1	Housing	Aluminum
2	Indicator cap	PE
3	Indicator	PE
4	Handle	Aluminum
5	Wormshaft	Nitempered steel
6	Drive bushing	Sintered copper steel
7	Quadrant	Sintered copper steel
8	Thrust bearing	Type AXK

Dimensions

The following tables are shown in millimeters unless otherwise specified

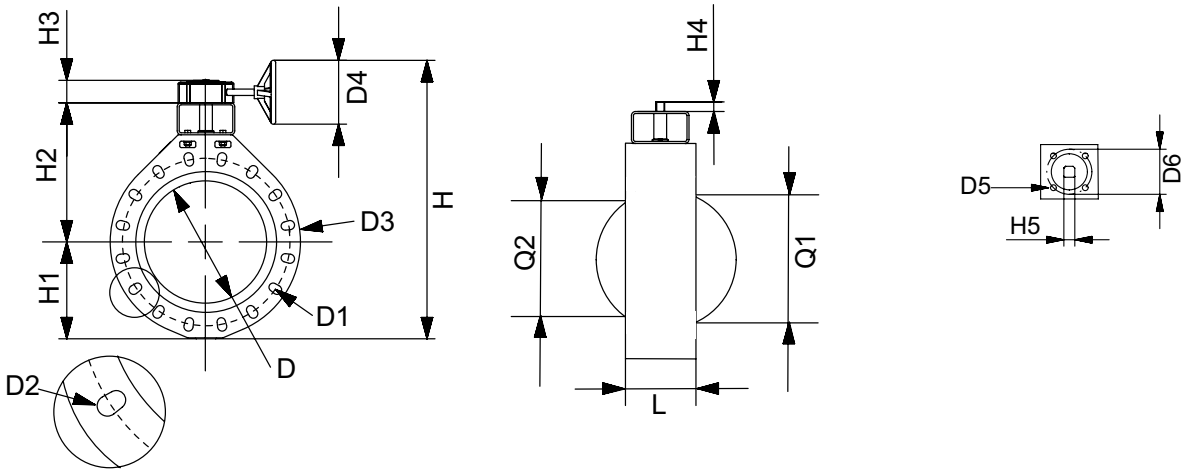

Size (Inch)	d (mm)	ISO	D	D1 Min	D1 Max	D2	D3	D4	D5	D6
14	355	F12	305	445	477	29	535	200	12	125
16	400	F12	351	510	540	29	595	200	12	125
18	450	F14	391	565	578	32	635	250	16	140
20	500	F14	439	620	635	32	700	350	16	140
24	630	F14	526	725	750	35	813	350	16	140

Size (Inch)	d (mm)	H	H1	H2	H3	H4	H5	L	Q1	Q2
14	355	747	268	410	69	31	22	129	325	305
16	400	804	300	435	69	31	27	169	353	350
18	450	921	320	520	81	35	27	179	393	390
20	500	994	350	550	94	35	36	190	444	440
24	630	1124	420	610	94	35	36	209	530	527

Aqua Wafer Style Butterfly Valve
Type 563

General

- **Size**: 2"–12"
- **Outer Body**: Glass-filled PP
- **Material**: PVC
- **Seals**: EPDM
- **Shaft**: 304 stainless steel
- **Hardware:** 304 stainless steel
- **Operation**: Lever, gear
- **Connection**: Both ANSI 150 and DIN
- **Standard Pack Quantity**: 1 valve

Key Certifications

- **NSF 61**: PVC
- **FDA CFR 21 177.2600**: EPDM

Material Specification

PVC valves shall meet ASTM D1784 cell classification 12454 standards. Valves of all materials shall be RoHS compliant.

Sample Specification

The Type 563 Butterfly Valve shall be wafer style compatible with both ANSI B16.5 150 lb and DIN 2501 flange patterns. The disk operation shall utilize double eccentric design principles. The shaft shall be non-wetted by a bushing assembly with double O-ring seals and fixed at both ends. The face seal shall be a Q-ring compatible with flat and serrated flange adapters. The face, disk and shaft seals shall operate independently. The wetted body and disk shall be of like materials. Valves shall be rated for bidirectional use. The handle shall be lockable with standard adjustment increments of 5 degrees. The operator mounting flange shall be comply with ISO standards. All valves shall be tested in accordance to ISO9393 and designed to ISO16136 standards. All valves shall be manufactured under ISO9001 for Quality and ISO14001 for Environmental Management. Following assembly, every valve shall be tested and certified bubble tight exceeding Class VI standards.

Technical Data

The following graphs are based on a lifetime of 25 years of water or similar media applications

Pressure-Temperature Curve

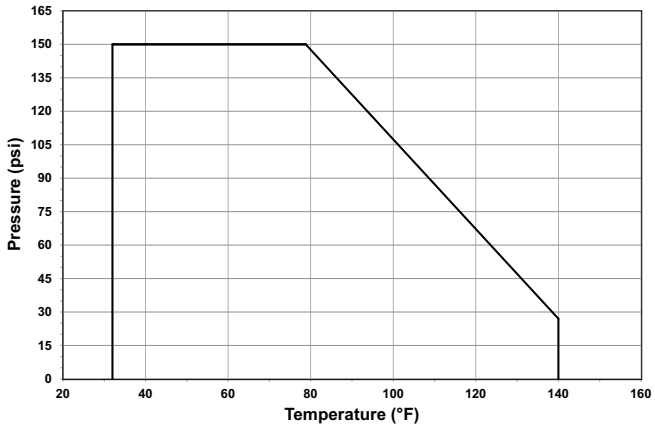

Cv values

Size (inch)	d (mm)	Cv (gal/min)
2	63	103
2½	75	154
3	90	210
4	110	455
5	140	805
6	160	1162
8	225	2772
10	280	3570
12	315	5110

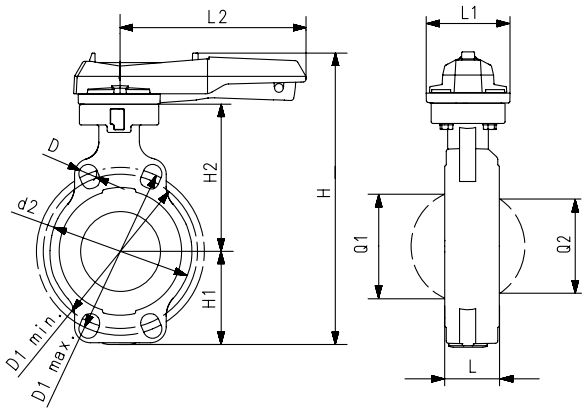

Dimensions

The following tables are shown in millimeters unless otherwise specified

Lever

Size (inch)	d (mm)	d2	D	D1 min	D1 max	D2	H	H1	H2	L	L1	L2	Q1	Q2
2	63	104	19	120	125	104	264	77	134	45	106	205	40	-
2½	75	115	19	140	145	115	277	83	140	46	106	205	54	35
3	90	131	19	150	160	131	289	89	146	49	106	205	67	50
4	110	161	19	175	191	161	325	104	167	56	106	255	88	74
5	140	187	23	210	216	187	352	117	181	64	106	255	113	97
6	160	215	24	241	241	215	373	130	189	72	106	255	139	123
8	225	267	23	290	295	267	435	158	210	73	140	408	178	169
10	280	329	25	353	362	329	554	205	264	113	149	408	210	207
12	315	379	25	400	432	379	598	228	285	113	149	408	256	253

Gear

Size (inch)	d (mm)	D3	H3	L1	L2	L3
2	63	160	62	78	112	179
2½	75	160	62	78	112	179
3	90	160	62	78	112	179
4	110	160	62	78	112	179
5	140	160	62	78	112	179
6	160	160	62	78	112	179
8	225	160	62	78	112	179
10	280	200	69	97	130	198
12	315	200	69	97	130	198

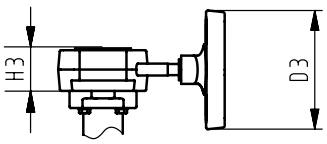

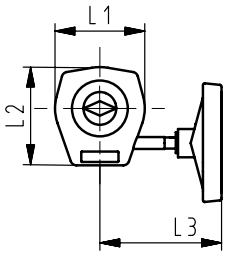

Lug Style Butterfly Valve
Type 578

General

- **Size**: 2"–12"
- **Outer Body**: Glass-filled PP
- **Material**: PVC, CPVC, PROGEF® Standard PP, ABS, SYGEF® Standard PVDF
- **Seals**: EPDM, FPM, PTFE/FPM
- **Stem**: 316 Stainless steel
- **Lugs**: 316 Stainless steel
- **Connection**: ANSI 150
- **Operation**: Bare shaft, lever, gear

Key Certifications

- **NSF 61**: PVC and CPVC
- **FDA CFR 21 177.1520**: PP and PVDF
- **FDA CFR 21 177.2600**: EPDM and FPM
- **FDA CFR 21 177.1550**: PTFE
- **USP 25 Class VI (physiological non-toxic)**: PP and PVDF

Sample Specification

The Type 578 Butterfly Valve shall be lug style compatible with ANSI B16.5 150 lb flange pattern. The operation shall utilize double eccentric design principles. The shaft shall be non-wetted by a bushing assembly with double o-ring seals. The face seal shall be a Q-ring compatible with flat and serrated flange adapters. The face, disk and shaft seals shall operate independently. The wetted body and disk shall be of like materials. The outer body shall be glass-filled polypropylene with over-molded 316 stainless steel lug inserts. Valves shall be rated for bidirectional use. All valves shall be tested in accordance to ISO9393 and designed to ISO16136 standards. All valves shall be manufactured under ISO9001 for Quality and ISO14001 for Environmental Management. Following assembly, every valve shall be tested and certified bubble tight exceeding Class VI standards.

Material Specification

PVC valves shall meet ASTM D1784 cell classification 12454 standards. CPVC valves shall meet ASTM D1784 cell classification 23447-B standards. PP valves shall meet ASTM D5847-14 cell classification PP0510B66851 standards. ABS valves shall meet ASTM D3965 cell classification 42222 standards. PVDF valves shall be type 1, grade 2 according to ASTM D3222 standards. Valves of all materials shall be RoHS compliant.

Optional Features

- **Actuation**: Electric, pneumatic
- **Limit Switches**: Mechanical, inductive
- **Handle**: Find adjustment lever (1°), stem extension
- **Shaft**: Titanium, Hastelloy-C
- **Operation**: Chain operator, square operating nut
- **Gear Operator**: Stainless steel housing
- **Connection**: DIN 2501
- **Hardware**: Alternatives available upon request
- **Cleaned**: Silicone free/oil free

Components

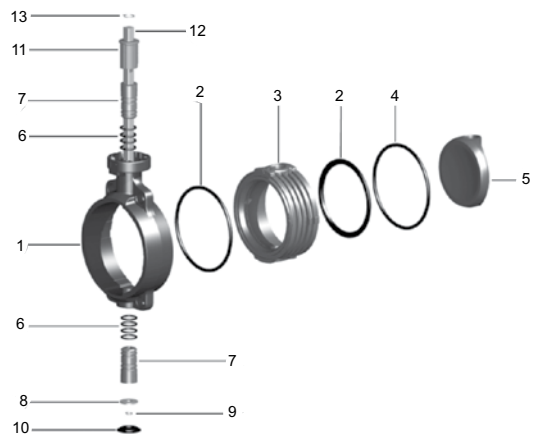

Valve Components

Part	Description	Material
1	Outer body (wafer shown)	Glass filled PP
2	Face seal	EPDM or FPM
3	Inner body	PVC, CPVC, PP, ABS or PVDF
4	Disk seal	EPDM, FPM or PTFE/FPM
5	Disk	PVC, CPVC, PP, ABS or PVDF
6	Shaft seal	EPDM or FPM
7	Shaft bushing	PVC, CPVC, PP, or PVDF
8	Washer	304 stainless steel
9	Lower retaining clip	304 stainless steel
10	Shaft cap	Glass filled PP
11	End stop	Glass filled PP
12	Shaft	316 stainless steel
13	Upper retaining clip	304 stainless steel

Material Availability

It is not possible to use inner housings with disks of different material. Valves of all sizes and materials are available with both EPDM and FPM seals. Only CPVC, PP and PVDF valves are available with PTFE encapsulated FPM disc seals. GF does not offer disc seals that deviate from their standard product offering.

Material	Range (inch)	Range (mm)
PVC	2-12	63-315
CPVC	2-12	63-315
PP	2-12	63-315
ABS	2-12	63-315
PVDF	2-12	63-315

Key Design Features

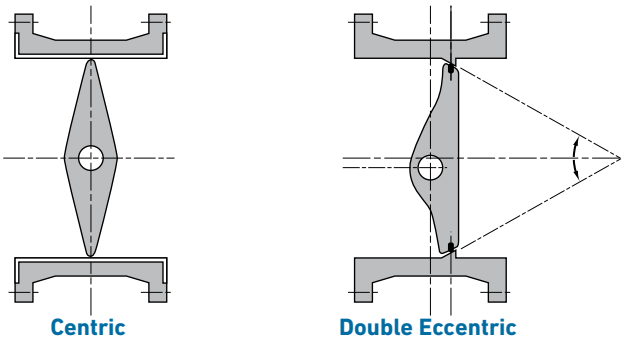

Double Eccentric Design Principle

The Type 578 Butterfly Valve is designed using the double eccentric disc principle. When opening and closing, the disc is not in contact with the seat, significantly reducing component wear. This design principle greatly reduces the operating torque and required elastomeric sealing material. The reduction in sealing material decreases the impact of elastomeric swelling. The benefits of double eccentric valves include ease of manual usage, reduction in required actuator torque and extended valve lifetime.

Seals

The Type 578 Butterfly Valve features a truly non-wetted shaft design. The shaft is sealed with a bushing assembly on either side of the disc. Each bushing utilizes a double o-ring seal totalling eight shaft seals in every valve.

Alternative o-ring shaft sealing designs are commonly found in competitive boot style thermoplastic butterfly valves. However, these solutions often rely upon elastomer on elastomer seals which can be unreliable, especially in chemical process applications or when working temperatures deviate from standard conditions. The Type 578 shaft seal design eliminates the need elastomer on elastomer seals, providing an industry tested dynamic double o-ring seal against a ridged thermoplastic surface.

The shaft, disc and face seals all operate independently from one another. This eliminates issues common to booted style centric valves such as crimping, where the compression of the valve between two flanges causes the boot to ripple. This can lead to increased operating torque and wear, ultimately reducing the useful life of the valve.

Lugs

The Type 578 Butterfly Valve lugs are overmolded SS316. They are keyed and notched to ensure they do not pull-out or rotate when in use.

PTFE Disc Seal

The Type 578 Butterfly Valve is available with a PTFE encapsuled FPM disc seal. The FPM core provides flexibility to the PTFE shell and allows for a reliable seal. The double eccentric design limits the amount of PTFE required. The face and shaft seals are FPM blended with approximately 15% PTFE.

Technical Data

Pressure-Temperature Curves

The following graphs are based on a lifetime of 25 years of water or similar media applications

PVC

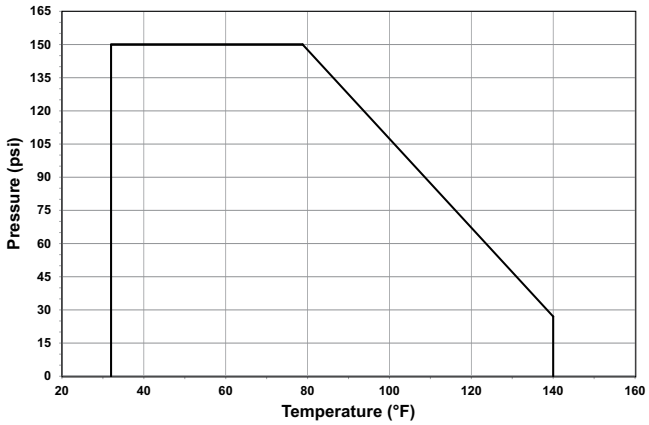

CPVC

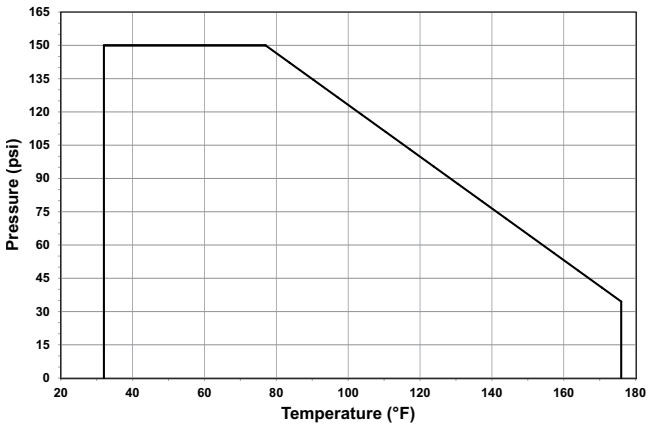

PP

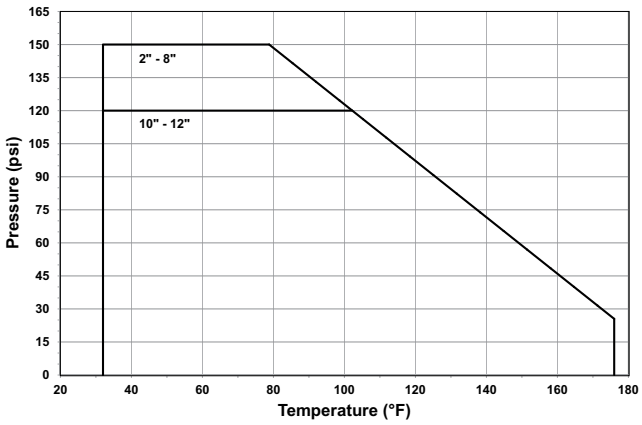

ABS

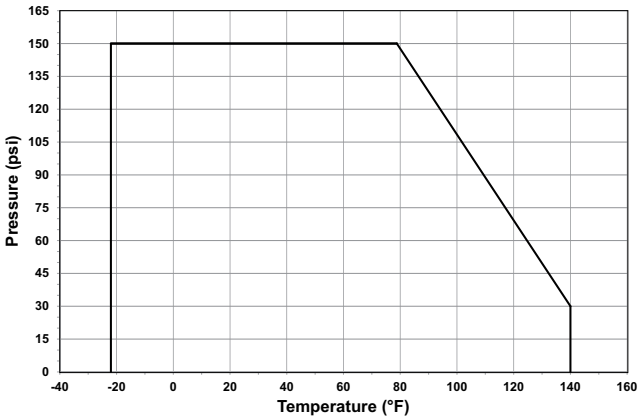

PVDF

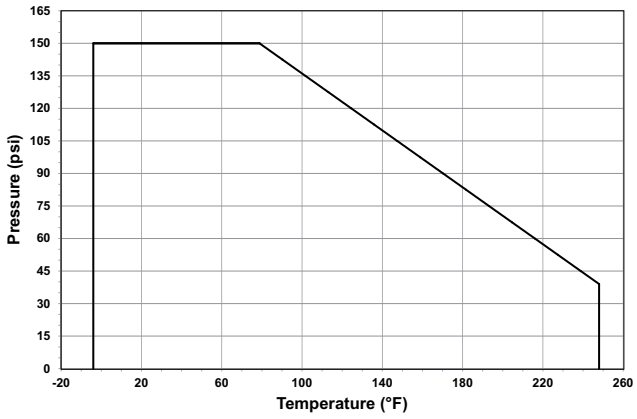

Pressure-Temperature

Material	Temperature Range (°F)	Max Pressure (psi)
PVC	32 to 140	150
CPVC	32 to 176	150
PP	32 to 176	150*
ABS	-40 to 140	150
PVDF	-4 to 284	150

*Dependant on size as shown in P-T curves

The Type 578 is rated for full vacuum service. Maximum differential pressure of 15psi at 122°F.

Flow

The following information is based on water applications at 68° F

Cv Value

Size (Inch)	d (mm)	Cv (gal/min)
2	63	103
2½	75	154
3	90	210
4	110	455
5	140	805
6	160	1162
8	225	2772
10	280	3570
12	315	5110

Flow Characteristics

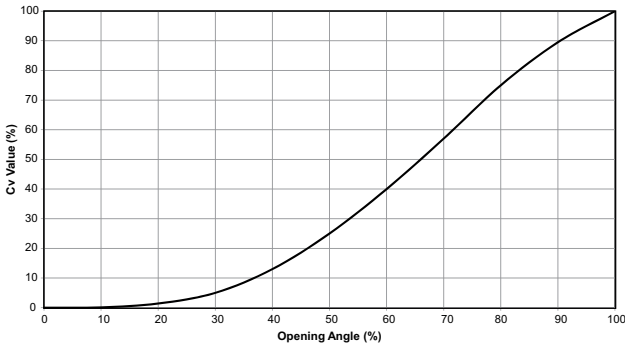

Breakaway Torque

The following tables show average values

Size (inch)	d (mm)	At 75psi Torque (ft-lb)	At 150psi Torque (ft-lb)
2	63	10	25
2½	75	10	30
3	90	20	45
4	110	30	60
5	140	40	75
6	160	50	90
8	225	75	120
10	280	100	170
12	315	130	220

For non-GF actuators, a safety factor should be used in calculating the required actuator torque. This safety factor can vary depending on the application conditions and end user's preference. (e.g. control time, medium, temperature, etc.).

Operator Components

Lever

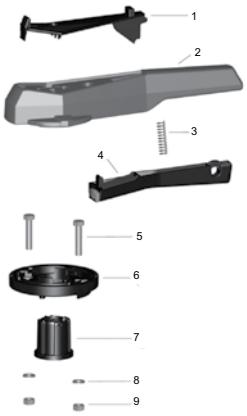

Gear Operator

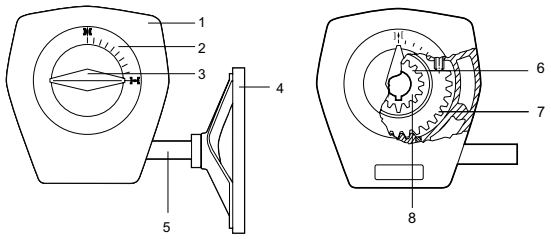

Lever Components

Part	Description	Material
1	Handle clip	Glass-filled PP
2	Handle	Glass-filled PP
3	Spring	304 Stainless steel
4	Lever	Glass-filled PP
5	Bolts	304 Stainless steel
6	Index plate	Glass-filled PP
7	Turn limiter	Glass-filled PP
8	Washers	304 Stainless steel
9	Nuts	304 Stainless steel

Gear Components

Part	Description	Material
1	Housing	Aluminum
2	Indicator cap	PE
3	Indicator	PE
4	Handle	Aluminum
5	Wormshaft	Nitempered steel
6	Drive bushing	Sintered copper steel
7	Quadrant	Sintered copper steel
8	Thrust bearing	Type AXK

Dimensions

The following tables are shown in millimeters unless otherwise specified

Bare Shaft

Size (inch)	D3	D4	H3	H4	H5
2	70	90	27	23	11
2½	70	90	27	23	11
3	70	90	27	23	11
4	70	90	16	23	14
5	70	90	16	23	14
6	70	90	19	23	17
8	70	90	19	23	17
10	102	125	40	23	22
12	102	125	40	23	22

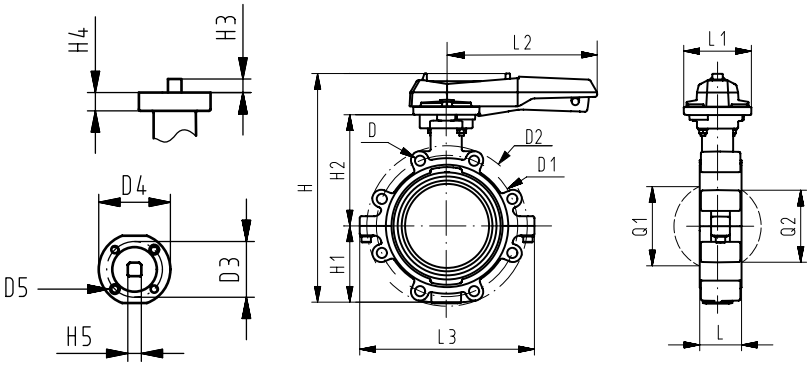

Lever

Size (inch)	D	D1	D2	H	H1	H2	L	L1	L2	L3	Q1	Q2
2	UNC 5/8	120.6	160	265	77	134	45	106	205	165	40	-
2½	UNC 5/8	139.7	180	277	83	140	46	106	205	182	54	35
3	UNC 5/8	152.4	195	289	89	146	49	106	205	210	67	50
4	UNC 5/8	190.5	226	328	106	167	56	106	255	240	88	74
5	UNC 3/4	215.9	258	357	121	181	64	106	255	272	113	97
6	UNC 3/4	241.3	284	377	133	189	72	106	255	300	139	123
8	UNC 3/4	298.4	341	436	159	210	73	140	408	360	178	169
10	UNC 7/8	362	412	536	205	264	113	149	408	440	210	207
12	UNC 7/8	431.8	482	586	234	285	113	149	408	510	256	253

Gear

Size (inch)	d (mm)	D3	H3	L1	L2	L3
2	63	160	62	78	112	179
2½	75	160	62	78	112	179
3	90	160	62	78	112	179
4	110	160	62	78	112	179
5	140	160	62	78	112	179
6	160	160	62	78	112	179
8	225	160	62	78	112	179
10	280	200	69	97	130	198
12	315	200	69	97	130	198

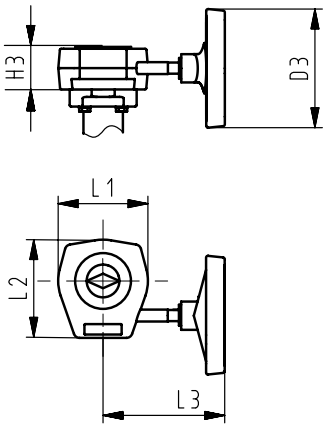

Lug Style Butterfly Valve
Type 365

General

- **Size**: 2"–12"
- **Clean:** High purity
- **Body Material**: Polyester coated ductile iron
- **Disk Material**: PFA encapsulated stainless steel
- **Liner**: PTFE
- **Body Style**: Lug
- **Connection**: ANSI 150
- **Operation**: Lever, gear

Key Certifications/Compliance

- **TA-Luft:** Shaft seal
- **ISO 5752/5 short (EN 558-1/T5):** PVDF liner
- **VDI 2440:** Shaft seal
- **EN-12266-1 Leakrate A:** Seal
- **ISO 5211:** Mounting
- **FDA 21CFR177.1550:** PTFE, PFA

Sample Specification

The Type 365 shall be a lug style butterfly valve rated for bidirectional use and dead end service. The disc material shall be PFA encapsulated stainless steel. The disc and shaft shall be single piece stainless steel and blow-out proof. The disc liner shall be constructed of virgin PTFE material with a minimum thickness of 3mm. All PTFE seals shall utilize a non-wetted elastomeric backing. The body shall be of a two piece design, constructed of ductile iron with a polyester coating. The shaft bearings shall be self lubricating. The shaft seals shall be of virgin PTFE material construction and Belleville disc springs shall compress these seals against disc hubs with a uniformly distributed load through pushers on both sides of the disc. Flange bolt patters shall comply with ANSI B16.5 class 150 standards. All valves shall be cleaned and double bagged in a class 10,000 clean room. All valves shall be rated for bubble tight shut-off.

Valve Shaft Cross Section

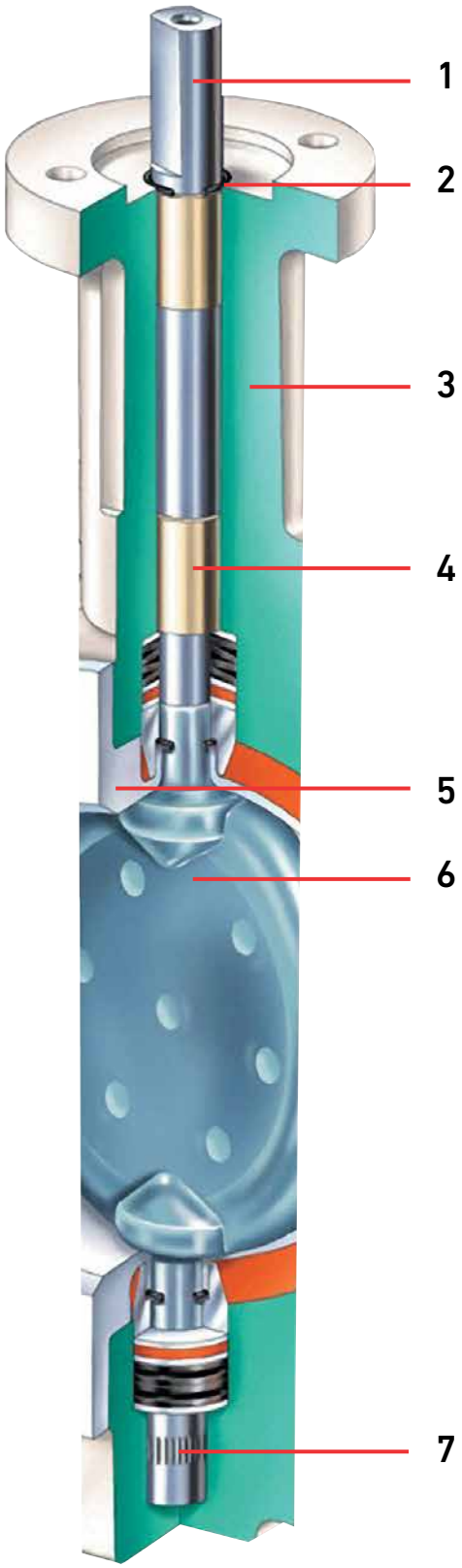

Optional Features

- **Actuation**: Electric, pneumatic
- **Size:** 14" - 24" (double flanged)
- **Limit Switches**: Mechanical, inductive
- **Handle**: Stem extension
- **Operation**: Chain operator, square operating nut
- **Gear Operator**: Stainless steel housing
- **Hardware**: Alternatives available upon request

Shaft Seal Detail

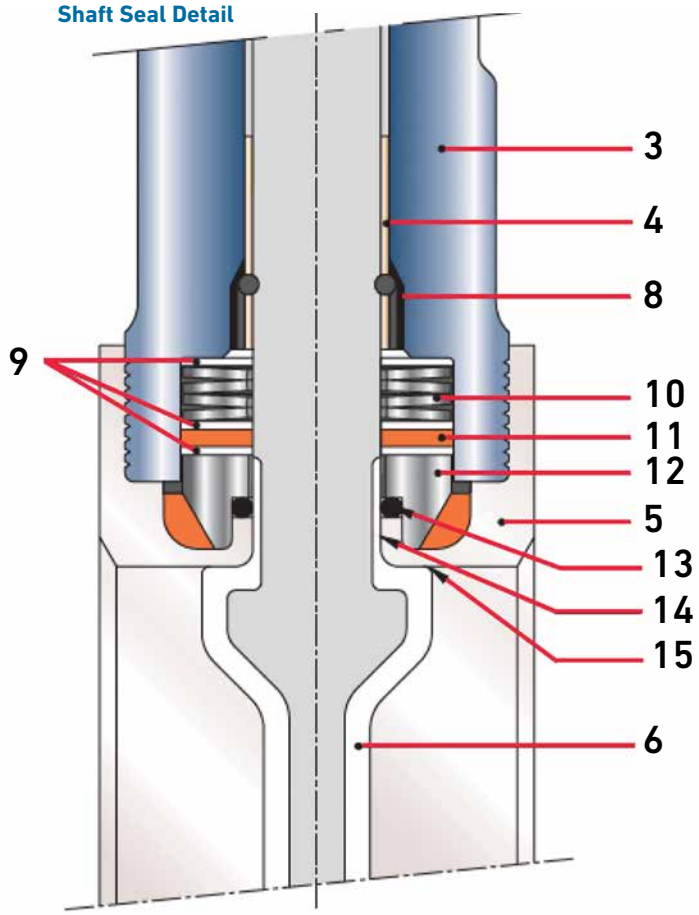

Components

Component	Description	Material
1	One piece disc/stem	Stainless steel
2	Atmospheric o-ring seal	FPM
3	Two piece body	Polyester coated ductile iron
4	Conductive bearing	Iglidur® X (Thermoplast)
5	Liner	Virgin PTFE
6	Disc encapsulation	PFA
7	Shaft base bearing	DU (Steel/PTFE)
8	Anti blow-out provision	Multiple
9	PTFE Washer	PTFE
10	Belleville washer	Spring steel
11	Backing washer	FPM
12	Pusher	Stainless steel
13	Pusher equalizer	FPM
14	Secondary radial lip seal	PFA/PTFE
15	Primary seal	PFA/PTFE

Technical Data

The following graphs are based on water or similar media applications

Pressure-Temperature Curve

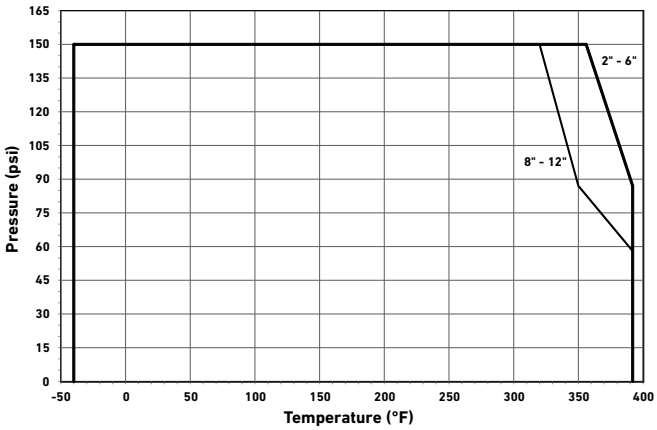

Pressure-Temperature

Size (inch)	Temperature Range (°F)	Max Pressure (psi)
2"–12"	-40 to 392	150

Flow Characteristics

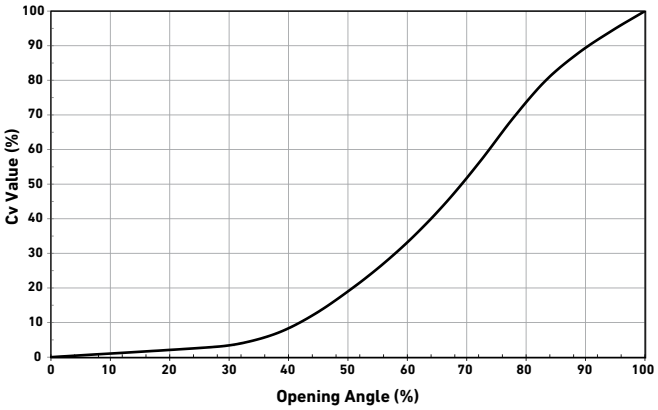

Cv values

Size (Inch)	d (mm)	Cv (gal/min)
2	63	121
3	90	475
4	110	857
6	160	2,281
8	225	4,037
10	280	4,821
12	315	7,054

Breakaway Torque

Size (Inch)	d (mm)	Torque (ft-lb)
2	63	15
3	90	33
4	110	44
6	160	103
8	225	140
10	280	236
12	315	309

Weight

Size (Inch)	d (mm)	Weight (lb)
2	63	8
3	90	14
4	110	18
6	160	30
8	225	52
10	280	72
12	315	110

Dimensions

The following tables are shown in millimeters unless otherwise specified

2"–4"

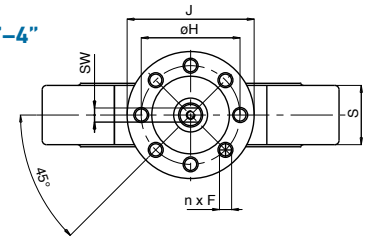

6"–12"

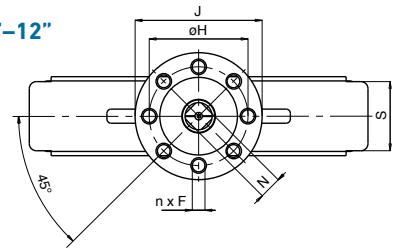

Lever

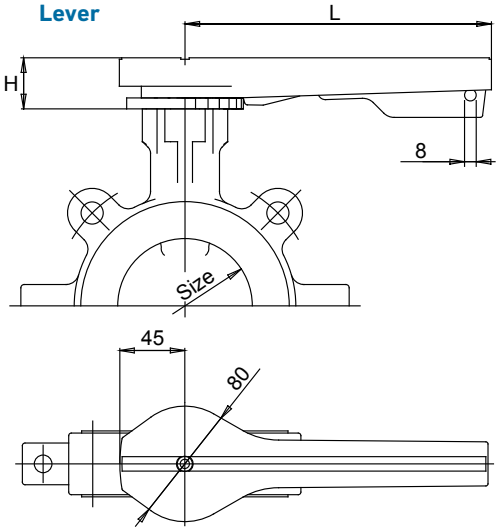

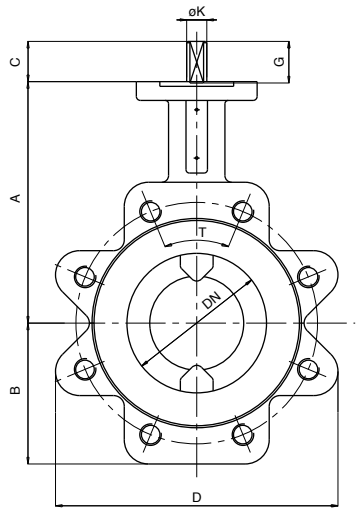

Bare shaft

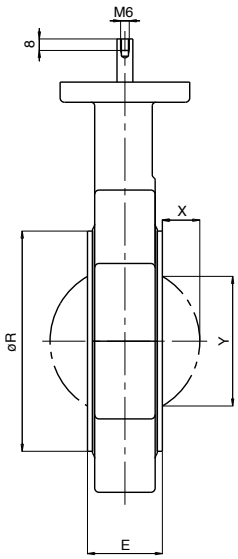

Gear

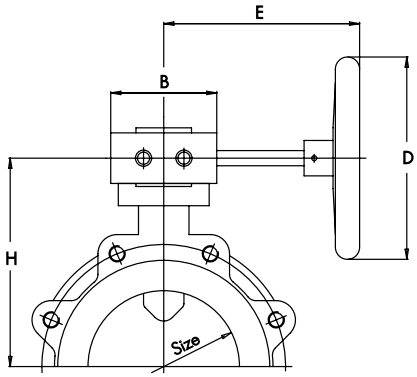

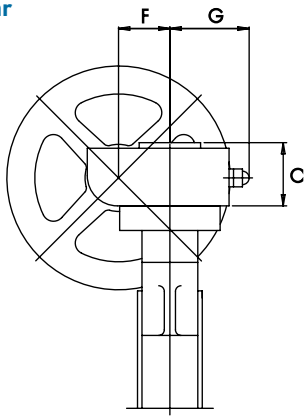

Bare Shaft

Size (inch)	d (mm)	ISO	A	B	C	D	E	n × F	G	ØH	ØJ	ØK	ØR	X	Y	N	SW
2	63	F05	135	65	26	160	43	8 × Ø7	27	50	65	15	95	5	31	-	10
3	90	F07	160	93.5	29	188	46	4 × Ø9	30	70	90	15	132	18.5	69	-	10
4	110	F07	180	105	29	210	52	4 × Ø9	30	70	90	15	153	26.5	91	-	10
6	160	F07	210	140	46	269	56	4 × Ø9	47	70	90	20	209	48.5	143	16/16	-
8	225	F12	240	170	65	360	60	4 × Ø11	66	125	150	8	259	71.5	196	19/19	-
10	250	F12	275	205	65	435	68	8 × Ø13	66	125	150	30	309	91.5	243	22/22	-
12	315	F12	310	250	65	500	78	8 × Ø13	66	125	150	30	364	111.5	293	27/27	-

Lever

Size (inch)	d (mm)	H	L
2	63	37	210
3	90	40	300
4	110	40	300
6	160	40	300

Note: Lever not available with 8" and larger valves

Gear

Size (inch)	d (mm)	B	C	D	E	F	G	H
3	90	102	68	200	187	52	57	189
4	110	102	68	200	187	52	57	209
6	160	102	68	200	187	52	57	239
8	225	138	89	250	203	71	83	290
10	280	138	89	250	203	71	83	315
12	315	138	89	315	209	71	83	351

Chain Operator
Type C101

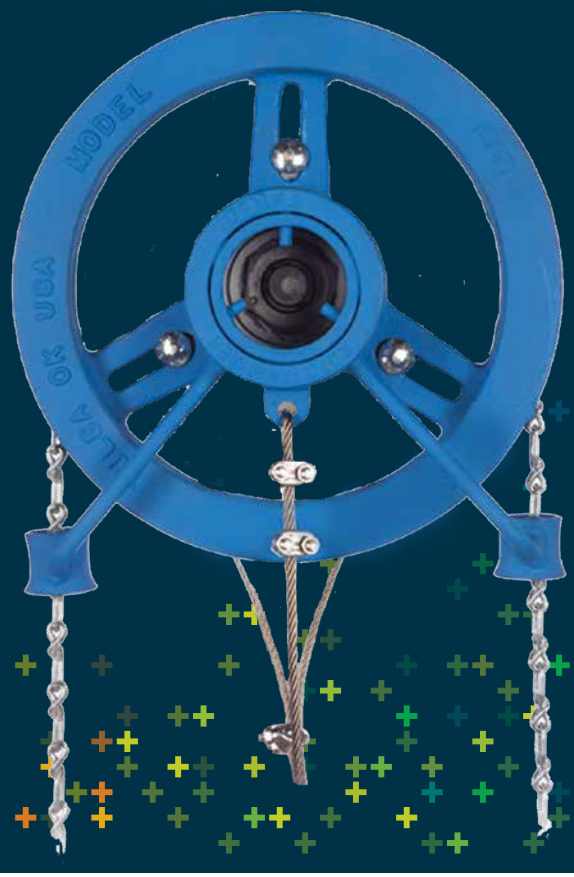

General

- **Size**: 2"–24"
- **Material**: Painted ductile iron
- **Hardware**: Zinc-plated steel
- **Valve**: All GF Gear Operated Butterfly Valves
- **Safety**: Cable linkage to valve inclusive
- **Chain**: 1/0
- **Hand Wheel**: 7.75"-9"
- **Weight**: 9 lb
- **Chain Wight**: 0.17 lb/ft

Optional Features

- **Material**: Galvanized, 316 Stainless Steel, Aluminum
- **Hardware**: Alternative materials available
- **Chain**: Stainless steel, master link

Sample Specification

The Type C101 Chain Operator shall be compatible with all GF Gear Operated Butterfly Valves and shall be directly mounted to the gear operator hand wheel with U-straps. A safety cable shall be secured to the gear operator and all required mounting hardware shall be provided by GF. The chain guide shall be free spinning and the sprocket shall rotate with the gear operator hand wheel.

Benefits

The Type C101 Chain Operator allows an operator to open or close a valve that is installed in a location of a piping system that is not readily accessible. The rugged design and the variety of material selection make the C101 suitable for most applications and environments.

Components

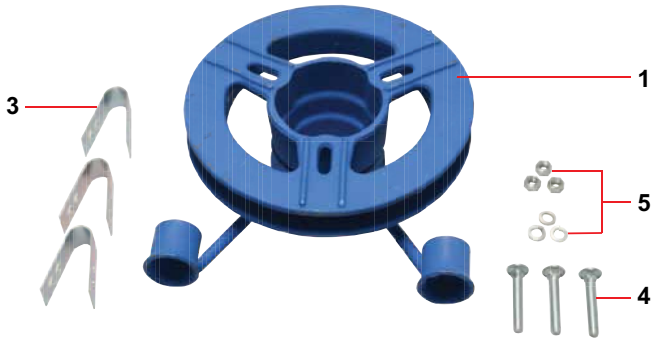

Components

Part	Description	Material
1	Chain operator	Painted ductile iron
2	Chain (not shown)	Zinc plated steel
3	U-strap	Zinc plated steel
4	Bolt	Zinc plated steel
5	Lock washer and nut	Zinc plated steel

Dimensions

The following tables are shown in inches unless otherwise specified

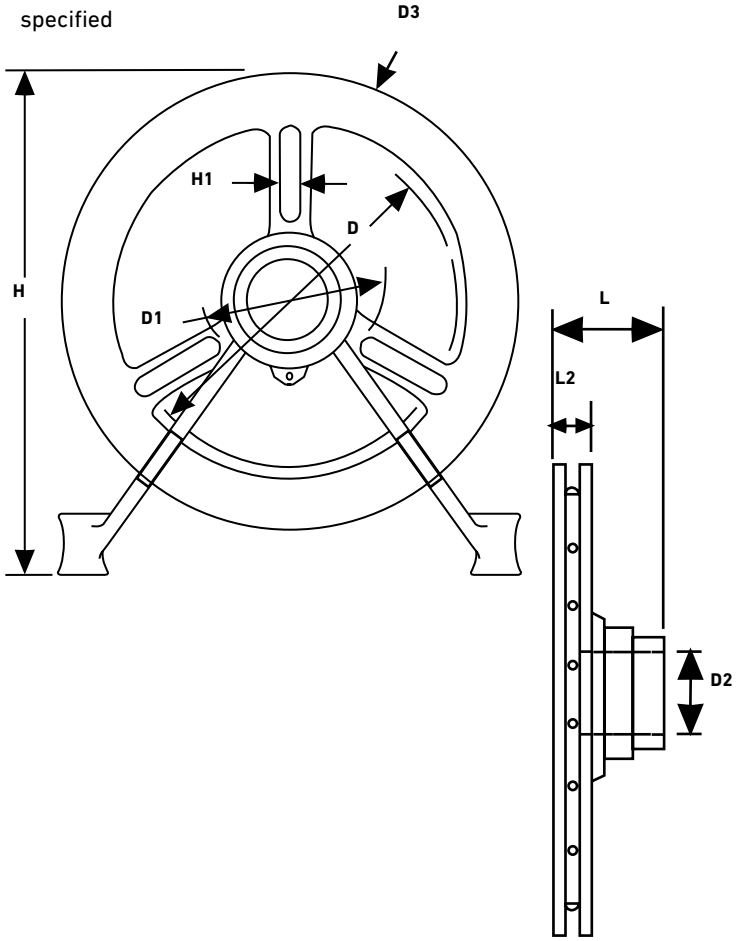

D	D1	D2	D3	H	H1	L	L1
6.31	3.81	2.31	8.75	9.75	0.34	3.12	1.19

Standard Setup

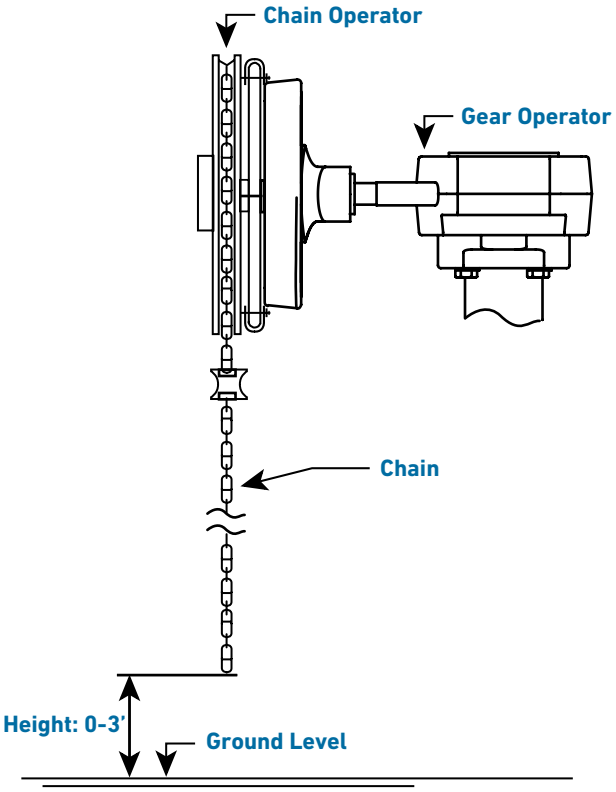

Square Operating Nut

General

- **Style:** Direct mount or gear operator mount
- **Material:** Aluminum (alternatives available upon request)
- **Type 546 Ball Valve Size:** 2½"–4" (d75–d110)
- **Type 578/567/563 Butterfly Valve Size:** 2"–24" (d63–d630)
- **Connection:** Set screw
- **Direct Mount Operation:** Quarter turn
- **Gear Op. Operation:** Multi-turn

Description

The 2" square operating nut is available on both ball and butterfly valves. The nut is mechanically connected to the stem of the valve and takes the place of the standard handle or gear operator. The nut can be directly installed on valve or used in conjunction with a gear operator. This allows for remote operation of the valve when it is below ground, in a well, under grating, or in a vault. Using this feature requires a tool that accommodates the nut.

Mounting Options

Gear-operated mount operating nuts use a gear operator to maintain the valves position. Standard gear operators from GF are not self-locking, but the mechanical advantage of the gear operator will maintain a valve's position even in high-velocity applications, defined by the suggested ideal velocity range for each given size line. If application velocities exceed these limits, a self-locking gear operator is suggested to be used.

Direct-mount operating nuts do not use a locking mechanism or mechanical advantage to maintain the valve's position and therefore should not be used on butterfly valves in medium- to high-velocity applications. Ball valves are less susceptible to this type of unwanted valve movement, but this style of operating nut should not be used on ball valves in high velocity applications.

Mount Options

Butterfly Valve Direct Mount

Square Nut Part Numbers

Size (Inch)	d (mm)	Direct Mount
2 - 3	63 - 90	150 900 454
4 - 5	110 - 140	150 900 456
6 - 8	160 - 225	150 900 457
10 - 12	280 - 315	150 900 459
14	355	150 901 460
16 - 18	400 - 450	150 901 461
20 - 24	500 - 630	150 901 462

Butterfly Valve Gear Op. Mount

Square Nut Part Numbers

Size (Inch)	d (mm)	Gear Op Mount
2 - 8	63 - 225	150 901 454
10 - 12	280 - 315	150 901 455
14 - 16	355 - 400	150 901 456
18	450	150 901 457
20-24	500 - 630	150 901 458

Ball Valve Mount

Square Nut Part Numbers

Size (Inch)	d (mm)	Direct Mount
2½ - 3	75 - 90	150 900 454
4	110	150 900 456

MFM Part Numbers

Size (Inch)	d (mm)	MFM
2½ - 3	63 -90	167 482 684
4	110	167 482 685

Diaphragm Valve

Type 514, 515, 517, 519

General

- **Size**: ½"–2"
- **Material**: PVC, CPVC, PROGEF® Standard® PP, PROGEF® Natural PPn, ABS, SYGEF® Standard PVDF, SYGEF® Plus PVDF-HP
- **Diaphragm**: EPDM, FPM, NBR, PTFE/EPDM, PTFE/FPM, PTFE-HP/EPDM, PTFE-HP/FPM
- **End Connection**: Solvent cement socket, threaded, flanged, fusion spigot union, fusion socket union, fusion spigot
- **Top Works**: Threaded connection to valve body
- **Position Indicator**: Integrated, graduated
- **Handle**: Lockable
- **Mounting**: Stainless steel inserts

Key Certifications

- **FDA CFR 21 177.1520**: PP and PVDF
- **FDA CFR 21 177.2600**: EPDM and FPM
- **FDA CFR 21 177.1550**: PTFE
- **USP 25 Class VI (physiological non-toxic)**: PP and PVDF

Sample Specification

The 5-Series Diaphragm Valve family shall include the Type 514, 515, 517 and 519. The Type 514 body shall be true union. The Type 515 body shall be spigot. The Type 517 body shall be spigot and the end connection shall be flanged. The Type 519 body shall be lateral style spigot. All 5-Series Diaphragm Valves shall be bidirectional. The bonnet to body connection shall be threaded. The handle shall be lockable. The diaphragm material shall be indicated by a color specific insert. The stroke shall be indicated by a graduated indicator. Type 517 ANSI versions shall meet ANSI B16.5 150lb standards. All 5-Series Diaphragm Valves with PTFE diaphragms shall have a non-bonded elastomeric backing and utilize FPM face seals if required. All valves shall be tested in accordance to ISO9393 and designed to ISO16138 standards. All valves shall be manufactured under ISO9001 for Quality and ISO14001 for Environmental Management. Following assembly, every valve shall be tested and certified bubble tight exceeding Class VI standards.

Material Specification

PVC valves shall meet ASTM D1784 cell classification 12454 standards. CPVC valves shall meet ASTM D1784 cell classification 23447-B standards. PP valves shall meet ASTM D5847-14 cell classification PP0510B66851 standards. ABS valves shall meet ASTM D3965 cell classification 42222 standards. PVDF valves shall be type 1, grade 2 according to ASTM D3222 standards. Valves of all materials shall be RoHS compliant.

Optional Features

- **Actuation**: Pneumatic
- **Limit Switches**: Mechanical, inductive
- **Top Works**: Atmospheric bonnet seal
- **High Pressure**: 232 psi max PVC, CPVC, PVDF (water only applications)
- **End Connection**: Alternatives available upon request
- **Face Seals**: Alternatives available upon request
- **Cleaned**: Silicone free/oil free

Definition of Valve Type

Type 514
True Union

Type 515
Spigot

Type 517
Flanged

Type 519
Zero Static

Components

Valve Components

Part	Description	Material
1	Valve body	PVC, CPVC, PP, PPn, or PVDF
2	Valve end	PVC, CPVC, PP, PPn, PE, or PVDF
3	Valve nut	PVC, CPVC, PP, PPn, or PVDF
4	Diaphragm	EPDM, FPM, NBR or PTFE
5	Diaphragm pin	Brass
6	Compressor	Glass-filled PP
7	Spindle	Brass/SS304
8	Spindle housing	Glass-filled PP
9	Position indicator	Glass-filled PP
10	Bonnet nut	Glass-filled PP
11	Bonnet	Glass-filled PP
12	Handle	Glass-filled PP
13	Handle lock	Glass-filled PP

Key Design Features

Threaded Bonnet

The 5-Series Diaphragm Valve utilizes several unique design features. The bonnet to valve body connection is threaded whereas a traditionally designed diaphragm valve utilizes metal body bolts. However when a valve is used in hot line applications, the components of the valve thermally expand and contract. The thermal expansion rate of metal is significantly less than plastics, meaning the metal body bolts of a traditionally designed diaphragm valve need to be retorqued after hot line shut downs. The bonnet to body mechanical connection of the 5-Series Diaphragm Valve is completely plastic, thus eliminating the need for retorquing.

The elimination of body bolts is ideal for applications in which corrosive chemicals are present in the atmosphere. Traditionally designed valves in these applications typically rely on exotic and expensive metal bolts to deter corrosion, when the body bolts are eliminated, this added cost is as well.

Key Design Features

True Zero Dead Leg

The Type 519 Diaphragm Valve is a truly revolutionary thermoplastic zero static valve. The peak of the weir is molded nearly directly on the inner diameter of the main. This design virtually eliminates dead space when the branch port is closed.

Type 519 valves are available in PP, PPn and PVDF. Polypropylene versions are available in size ranges from d20xd20 to d63xd32 and PVDF versions are available in size ranges from d20xd20 to d110xd63.

Chemical Applications: Optional Features

Permeation Barrier

The 5-Series Diaphragm Valve utilizes several design features that are beneficial in chemical process applications. A commonly used diaphragm material in these applications is PTFE. All GF PTFE diaphragms are installed with a non-bonded elastomeric backing, either EPDM or FPM. The FPM backing is impregnated with approximately 15% PTFE. These diaphragms are available with all 5-Series Diaphragm Valve body materials. The backing material completely covers the PTFE diaphragm with the exception of the diaphragm pin.

One concern with diaphragm valves in chemical process applications is permeation. The 5-Series diaphragm is designed to protect against damage commonly caused by permeation. The FPM/PTFE backing provides a chemically resistant barrier to protect the mechanical components inside the bonnet. The backing protects nearly the entire PTFE diaphragm to provide maximum protection against component corrosion.

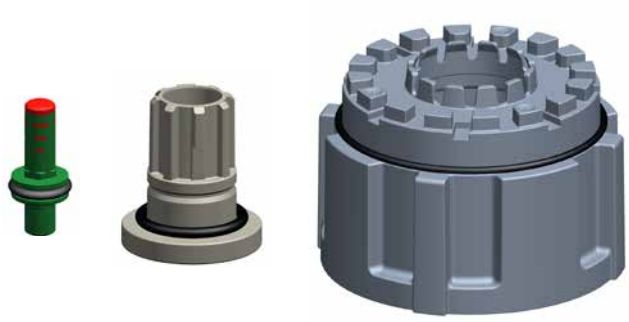

Bonnet Seal

Corrosive environments can be detrimental to valve components that are not exposed to media. This is addressed with the 5-Series Diaphragm Valve in the bonnet seals. The bonnet seal is available with all varieties of 5-Series Valves and utilizes three o-rings. One on the position indicator, one on the spindle housing and one on the bonnet nut. The combination of these o-rings seals the inner works of the valves from the atmosphere. The result of this is that there is no exposed metal to the atmosphere with the exception of the threaded mounting inserts on the base of the valve.

Technical Data

Pressure Temperature Curves

The following graphs are based on a 25 year lifetime water or similar media application

PVC

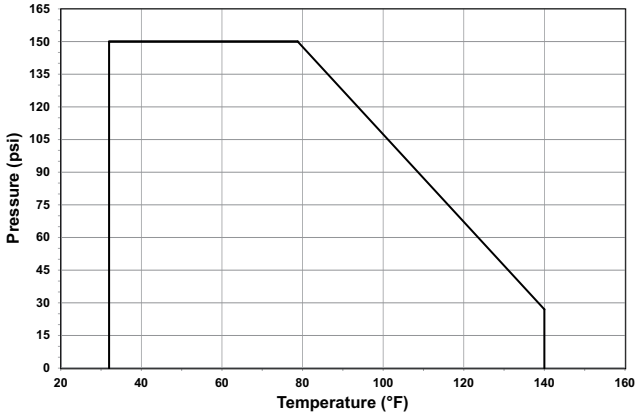

CPVC

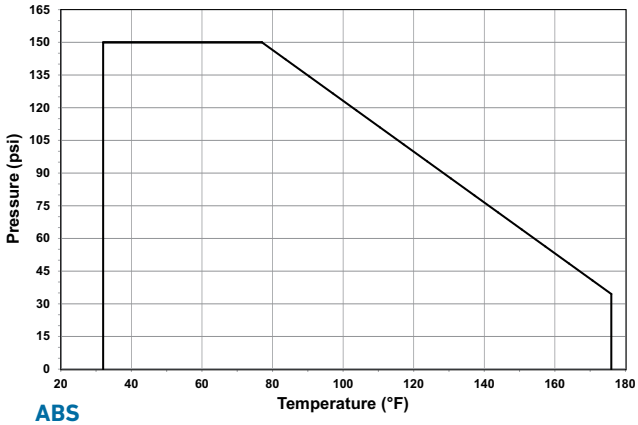

PP/PPn

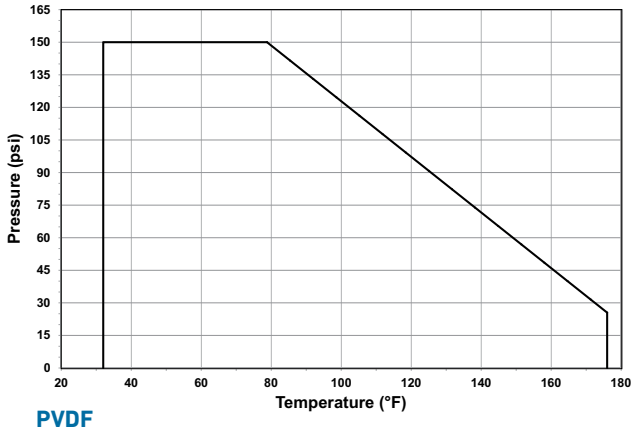

ABS

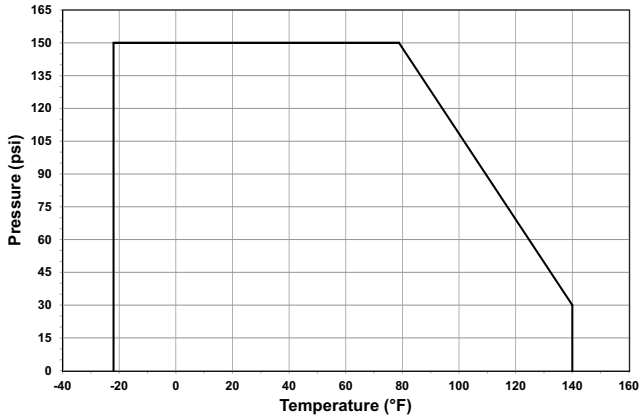

PVDF

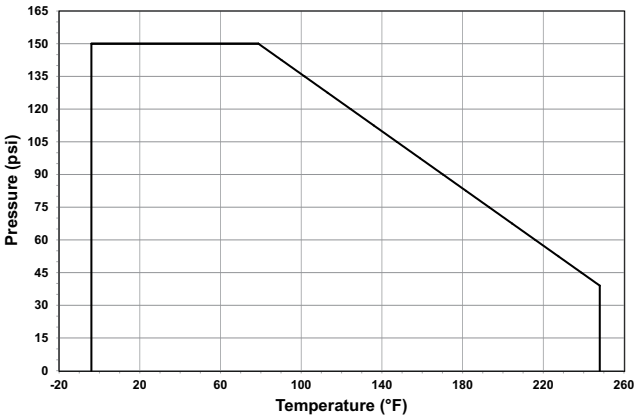

Pressure-Temperature

Material	Temperature Range (°F)	Max Pressure (psi)
PVC*	32 to 140	150
CPVC*	32 to 176	150
PP/PPn	32 to 176	150
ABS	-40 to 140	150
PVDF*	-4 to 284	150

Vacuum Service

5-Series Diaphragm Valve with an elastomeric diaphragm are rated for full vacuum service, maximum differential pressure of 15psi at 122°F. 5-Series Diaphragm Valves with a PTFE diaphragm are not rated for full vacuum service, maximum differential pressure of 8.7psi at 122°F.

High Pressure Applications: Optional Feature

The 5-Series diaphragm valve is available with a glass-filled black PPS bonnet. This high-strength, rigid material increases the rated pressure to 232psi. It is available with PVC, CPVC and PVDF bodies with EPDM, FPM or PTFE diaphragms. GF recommends that all valves fitted with this bonnet be used in water applications only.

Flow

The following information is based on water applications at 68° F

Flow Characteristics Type 514–517

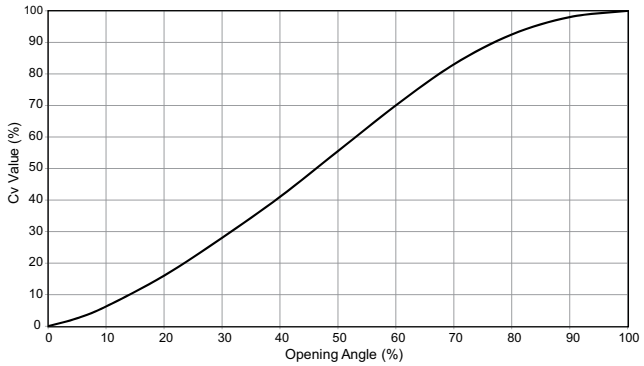

Flow Characteristics Type 519

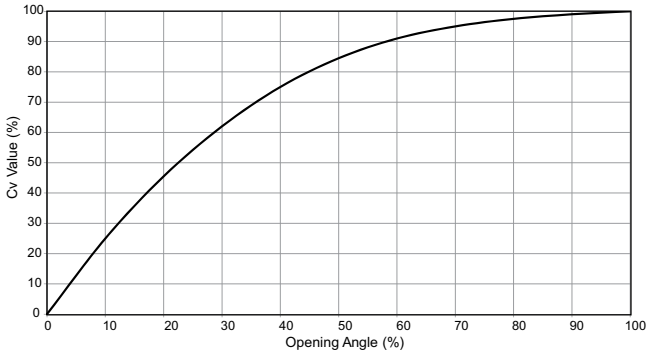

Key Design Features

Weir Design

The threaded bonnet design also eliminated the need for valve body bolt holes. This allowed GF engineers to decrease the grade of the weir and design a valve with an optimized flow path. This significantly increases the Cv value when comparing the 5-Series Valve to traditionally designed diaphragm valves.

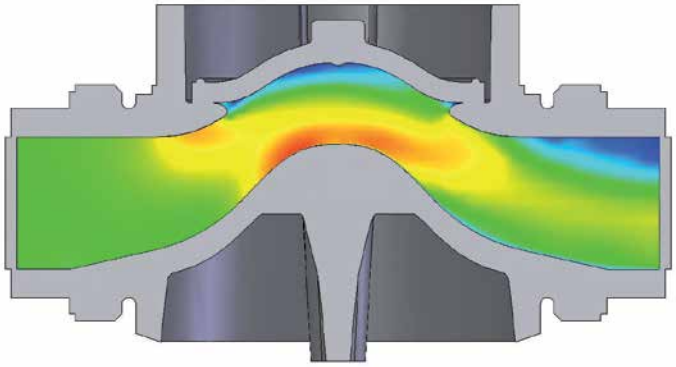

Cv Value Type 514-517

Size (inch)	d (mm)	Cv (gal/min)
½	20	8.4
¾	25	18.3
1	32	32.5
1¼	40	51.3
1½	50	85.3
2	63	116.8

Cv Value Type 519

Main (mm)	Branch (mm)	Cv (gal/min)
20	20	3.9
25	20	6.0
25	25	8.0
32	20	5.4
32	25	7.1
32	32	15.6
40	20	5.7
40	25	8.0
40	32	10.3
40	40	12.6
50	20	5.8
50	25	10.8
50	32	13.9
50	40	35.4
50	50	45.1
63	20	5.7
63	25	10.1
63	32	12.4
63	40	31.8
63	50	41.2
63	63	50.5
90	20	5.7
90	25	7.2
90	32	9.0
90	50	43.6
90	63	48.7
110	20	5.5
110	25	7.2
110	32	9.2
110	50	42.3
110	63	46.3

Dimensions

The following tables are shown in millimeters unless otherwise specified

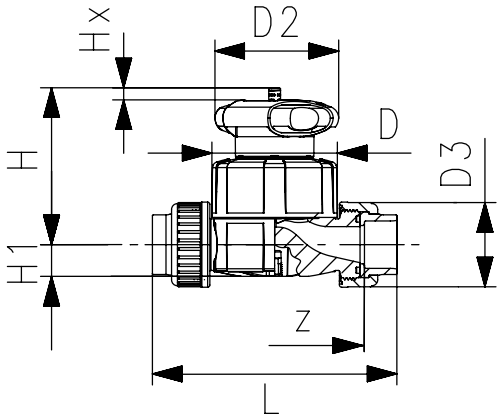

Type 514 Socket

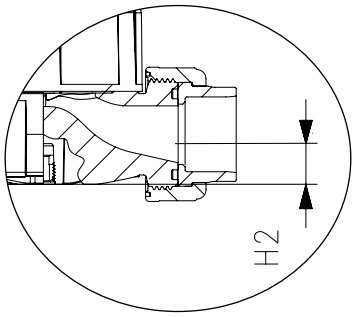

All 5-Series Mounting

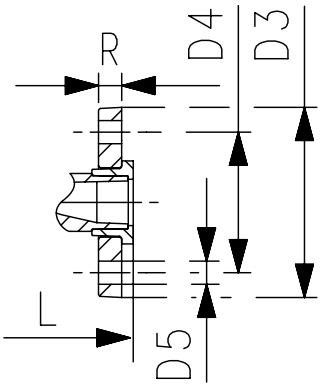

Type 517

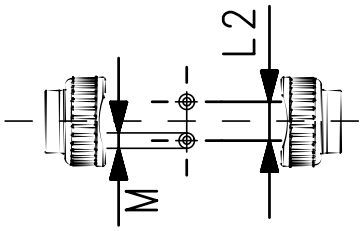

All Types Mounting Base

All Types

Size (inch)	d (mm)	D	D2	D3	L2	H	H1	H2	M	Hx
½	20	65	65	43	25	73	14	12	M6	7
¾	25	80	65	51	25	81	18	12	M6	10
1	32	88	87	58	25	107	22	12	M6	13
1¼	40	101	87	72	45	115	26	15	M8	15
1½	50	117	135	83	45	148	32	15	M8	19
2	63	144	135	100	45	166	39	15	M8	25

Type 514 PVC/CPVC

Size (inch)	IPS Socket		Threaded NPT	
	L	z	L	z
½	136	96	128	94
¾	160	114	152	116
1	176	122	166	122
1¼	198	140	192	143
1½	232	160	222	176
2	268	190	266	218

Type 517 PVC/CPVC

Size (inch)	ANSI Flanged				
	L	D3 (inch)	D4 (inch)	D5 (inch)	R (inch)
½	130	3.74	2.36	0.63	0.63
¾	150	4.13	2.76	0.63	0.67
1	160	4.53	3.11	0.63	0.71
1¼	180	5.51	3.5	0.63	0.63
1½	200	5.91	3.86	0.63	0.71
2	230	6.5	4.76	0.75	0.71

Type 514 ABS

d(mm)	Metric Socket	
	L	z
20	128	96
25	152	114
32	166	122
40	192	140
50	222	160
63	266	190

Type 517 ABS

Size (inch)	ANSI Flanged				
	L	D3 (inch)	D4 (inch)	D5 (inch)	R (inch)
½	130	3.74	2.36	0.63	0.63
¾	150	4.13	2.76	0.63	0.67
1	160	4.53	3.11	0.63	0.71
1¼	180	5.51	3.5	0.63	0.63
1½	200	5.91	3.86	0.63	0.71
2	230	6.5	4.76	0.75	0.71

Dimensions

The following tables are shown in millimeters unless otherwise specified

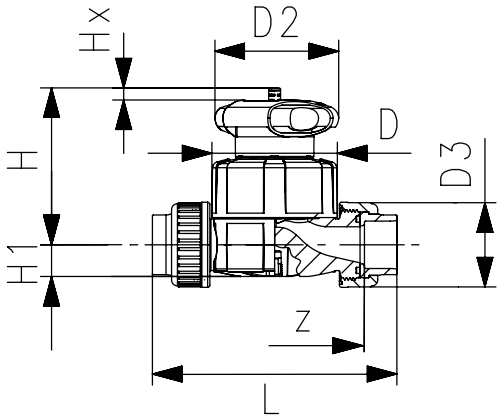

Type 514 Socket

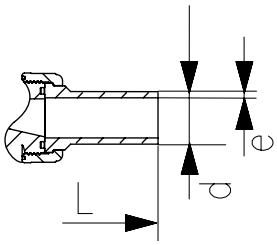

Type 514 IR/Butt

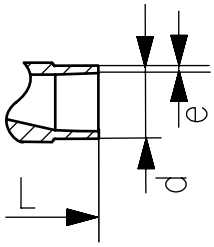

Type 515 IR/Butt

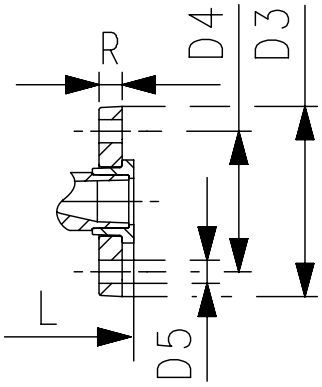

Type 517

Type 514 PP

d(mm)	Metric IR/Butt		Metric Socket		Threaded NPT	
	L	e	L	z	L	z
20	196	1.9	128	100	132	98
25	221	2.3	150	118	154	118
32	234	2.9	162	126	172	128
40	260	3.7	184	144	196	148
50	284	4.6	210	164	222	176
63	321	5.8	248	194	266	218

Type 515 PP

d(mm)	Metric IR/Butt	
	L	e
20	124	1.9
25	144	2.3
32	155	2.9
40	176	3.7
50	193	4.6
63	223	5.8

Type 517 PP

Size (inch)	ANSI Flanged				
	L	D3 (inch)	D4 (inch)	D5 (inch)	R (inch)
½	130	3.74	2.36	0.63	0.63
¾	150	4.13	2.76	0.63	0.67
1	160	4.53	3.11	0.63	0.71
1¼	180	5.51	3.5	0.63	0.63
1½	200	5.91	3.86	0.63	0.71
2	230	6.5	4.76	0.75	0.71

Type 517 PVDF

Size (inch)	ANSI Flanged				
	L	D3 (inch)	D4 (inch)	D5 (inch)	R (inch)
½	130	3.74	2.36	0.63	0.63
¾	150	4.13	2.76	0.63	0.67
1	160	4.53	3.11	0.63	0.71
1¼	180	5.51	3.5	0.63	0.63
1½	200	5.91	3.86	0.63	0.71
2	230	6.5	4.76	0.75	0.71

Type 514 PVDF

d(mm)	Metric IR/Butt		Metric Socket		Threaded NPT	
	L	e	L	z	L	z
20	196	1.9	128	100	132	98
25	220	1.9	150	118	154	118
32	234	2.4	162	126	172	128
40	258	2.4	184	144	196	150
50	284	3.0	210	164	222	176
63	320	3.0	248	194	266	218

Type 515 PVDF

d(mm)	Metric IR/Butt	
	L	e
20	124	1.9
25	144	1.9
32	155	2.4
40	176	2.4
50	193	3.0
63	223	3.0

Dimensions

The following tables are shown in millimeters unless otherwise specified

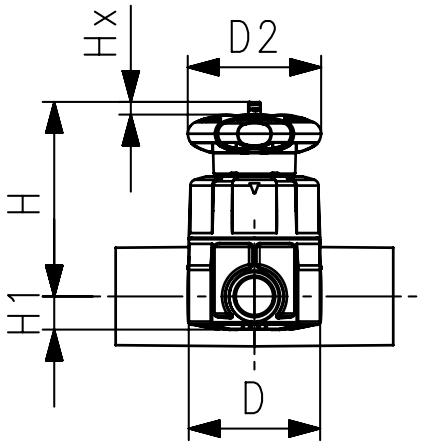

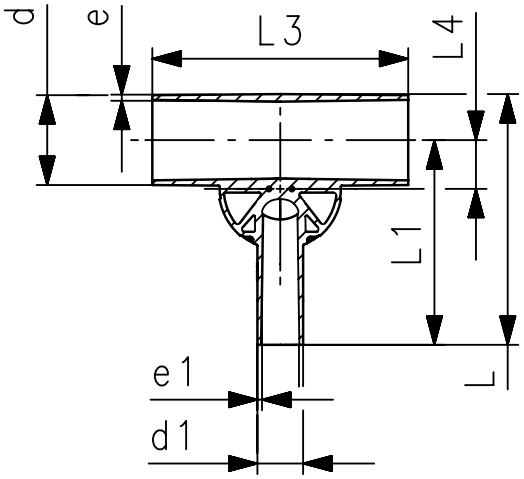

Type 519 Zero Static

d-d1 (mm)	Valve (mm)	D	D2	L	L1	L3	L4	H	H1	Hx	e PVDF	e1 PVDF	e PP/ PPn	e1 PP/ PPn
20-20	20	65	65	117	96	162	12	75	14	7	1.9	1.9	1.9	1.9
25-20	25	80	65	133	108	162	16	80	18	10	1.9	1.9	2.3	1.9
25-25	25	80	65	133	108	162	16	80	18	10	1.9	1.9	2.3	2.3
32-20	25	80	65	142	120	162	19	84	22	10	2.4	1.9	2.9	1.9
32-25	25	80	65	142	120	162	19	84	22	10	2.4	1.9	2.9	2.3
32-32	32	88	87	145	120	160	19	107	22	13	2.4	2.4	2.9	2.9
40-20	32	88	87	149	128	180	23	115	22	13	2.4	1.9	3.7	1.9
40-25	32	88	87	149	128	180	23	115	22	13	2.4	1.9	-	-
40-32	32	88	87	149	128	180	23	115	22	13	2.4	2.4	-	-
40-40	32	88	87	174	153	180	23	115	22	13	2.4	2.4	3.7	3.7
50-20	25	80	65	160	134	180	27	97	18	10	3.0	1.9	4.6	1.9
50-25	32	88	87	160	134	180	28	120	22	13	3.0	1.9	4.6	2.3
50-32	32	88	87	160	134	180	28	120	22	13	3.0	2.4	4.6	2.9
50-40	63	144	135	209	169	209	33	164	32	25	3.0	2.4	-	-
50-50	63	144	135	209	169	209	33	164	32	25	3.0	3.0	-	-
63-20	25	80	65	177	144	180	33	104	18	10	3.0	1.9	5.8	1.9
63-25	32	88	87	177	144	180	35	127	22	13	3.0	1.9	5.8	2.3
63-32	32	88	87	177	144	180	35	127	22	13	3.0	2.4	5.8	2.9
63-40	63	144	135	225	192	220	39	170	39	25	3.0	2.4	-	-
63-50	63	144	135	225	192	220	39	170	39	25	3.0	3.0	-	-
63-63	63	144	135	225	192	220	39	170	39	25	3.0	3.0	-	-
90-20	32	88	87	205	159	190	47	140	22	13	4.3	1.9	-	-
90-25	32	88	87	205	159	190	47	140	22	13	4.3	1.9	-	-
90-32	32	88	87	205	159	190	47	140	22	13	4.3	2.4	-	-
90-50	63	144	135	254	207	250	51	184	39	25	4.3	3.0	-	-
90-63	63	144	135	254	207	250	51	184	39	25	4.3	3.0	-	-
110-20	32	88	87	227	171	190	56	149	22	13	5.3	1.9	-	-
110-25	32	88	87	227	171	190	56	149	22	13	5.3	1.9	-	-
110-32	32	88	87	227	171	190	56	149	22	13	5.3	2.4	-	-
110-50	63	144	135	276	219	250	60	194	39	25	5.3	3.0	-	-
110-63	63	144	135	276	219	250	60	194	39	25	5.3	3.0	-	-

Diaphragm Valve
Type 317

General

- **Size**: 2½"–6"
- **Material**: PVC, CPVC, PROGEF® Standard PP, SYGEF® Standard PVDF, SYGEF® Plus PVDF-HP
- **Diaphragm**: EPDM, FPM, NBR, CSM, PTFE/EPDM, PTFE/FPM, PTFE-HP/EPDM or PTFE-HP/FPM
- **End Connection**: ANSI 150/DIN flanged
- **Top Works**: Body bolts
- **Mounting**: Stainless steel inserts
- **Position Indicator**: Integrated graduated

Key Certifications

- **FDA CFR 21 177.1520:** PP and PVDF
- **FDA CFR 21 177.2600:** EPDM and FPM
- **FDA CFR 21 177.1550:** PTFE
- **USP 25 Class VI (physiological non-toxic):** PP and PVDF
- **ABS:** All materials

Sample Specification

The Type 317 diaphragm valve family shall be an ANSI B16.5 150 lb flanged connection. All Type 317 diaphragm valves shall be bidirectional. All fasteners securing bonnet to body connection shall be stainless steel. All valves shall have threaded stainless steel inserts for mounting. The stroke shall be indicated by a graduated indicator. All valves shall be tested in accordance to ISO9393 and designed to ISO16138 standards. All valves shall be manufactured under ISO9001 for Quality and ISO14001 for Environmental Management. Following assembly, every valve shall be tested and certified bubble tight exceeding Class VI standards.

Optional Features

- **Limit Switches**: Inductive
- **Actuation**: Pneumatic
- **Material:** ABS
- **End Connection**: ISO/DIN flanged, fusion socket union, fusion spigot union
- **Hardware**: Alternatives available upon request
- **Cleaned**: Silicone/oil free

Material Specification

PVC valves shall meet ASTM D1784 cell classification 12454 standards. CPVC valves shall meet ASTM D1784 cell classification 23447-B standards. PP valves shall meet ASTM D5847-14 cell classification PP0510B66851 standards. PVDF valves shall be type 1, grade 2 according to ASTM D3222 standards. Valves of all materials shall be RoHS compliant.

Definition of Connection Type

- **2½" (d75)**: Spigot body with fused flange adapter and loose flange ring
- **3" - 6" (d90 - d160)**: Fully molded body with integrated fixed flange

Material Availability

Material	Range (inch)	Range (mm)
PVC	2-6	75-160
CPVC	2-4	75-110
PP	2-6	75-160
PVDF	2-6	75-160

Diaphragm Availability

Material	Range (inch)	Range (mm)
EPDM	2-6	75-160
FPM	2-6	75-160
NBR	2-6	75-160
CSM	2-6	75-160
PTFE/EPDM	2-6	75-160
PTFE/FPM	2-4	75-110
PTFE-HP/EPDM	2-6	75-160
PTFE-HP/FPM	2-4	75-110

Weight

Size (inch)	d (mm)	PVC (lb)	CPVC (lb)	PP (lb)	PVDF (lb)
2½	75	9.5	9.5	12.0	12.6
3	90	21.4	21.4	19.0	23.6
4	110	30.0	30.0	25.0	32.8
6	160	59.5	59.5	55.2	68.3

Body Bolt Torque

Size (inch)	d (mm)	Torque (lb-in)
2½	75	221.3
3	90	247.8
4	110	265.5
6	160	354.0

Handwheel Closing Torque

Size (inch)	d (mm)	Torque (lb-in)
2½	75	177
3	90	265.5
4	110	398.3
6	160	1239.1

Components

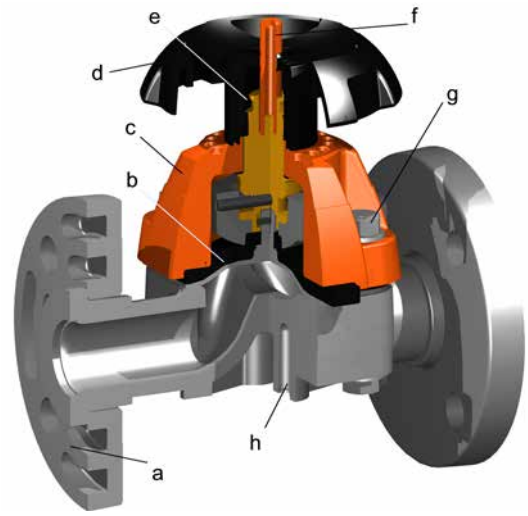

Component	Description	Material
a	Body	PVC, CPVC, PP, ABS, PVDF
b	Diaphragm	EPDM, FPM, NBR, CSM, PTFE/ EPDM, PTFE/FPM
c	Bonnet	Glass-fill PP
d (2½")	Handwheel	PP
d (3", 4")	Handwheel	PVC
d (6")	Handwheel	PPTSG
e	Spindle assembly	Multiple
f	Position indicator	PE
g	Body bolt	Stainless steel 304
h	Threaded inserts	Stainless steel 304

Technical Data

Pressure Temperature Curves

The following graphs are based on a 25 year lifetime water or similar media application

PVC

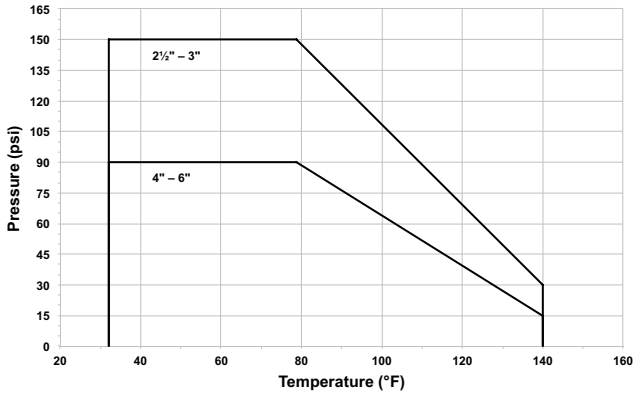

CPVC

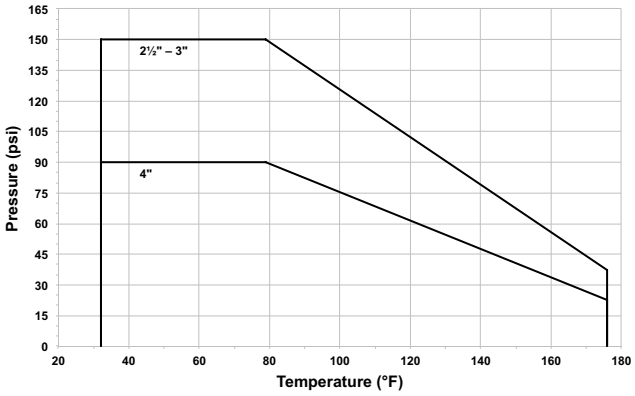

PP

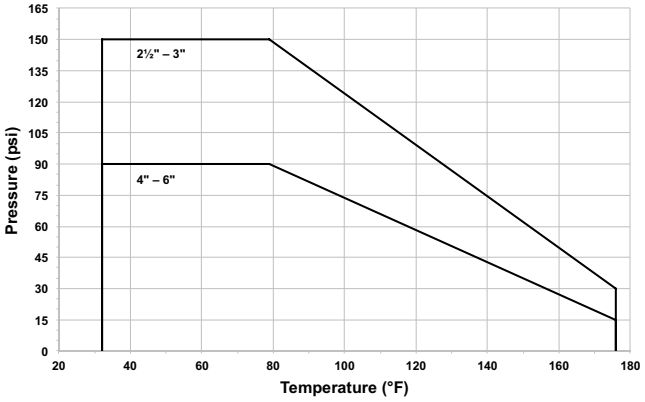

PVDF

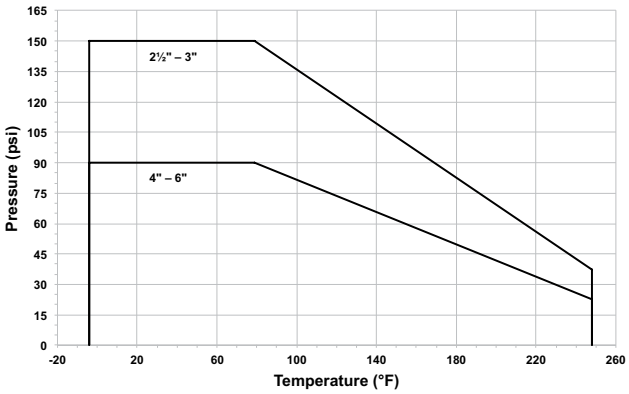

Vacuum Service

Type 317 Diaphragm Valve with an elastomeric diaphragm are rated for full vacuum service, maximum differential pressure of 15psi at 122°F. Type 317 Diaphragm Valves with a PTFE diaphragm are not rated for full vacuum service, maximum differential pressure of 8.7psi at 122°F.

Pressure-Temperature

Material	Temperature Range (°F)	Max Pressure (psi)
PVC	32 to 140	150*
CPVC	32 to 176	150*
PP	32 to 176	150*
PVDF	-4 to 284	150*

*Dependant on size as shown in P-T curves

Flow

The following information is based on water applications at 68° F

Flow Characteristics

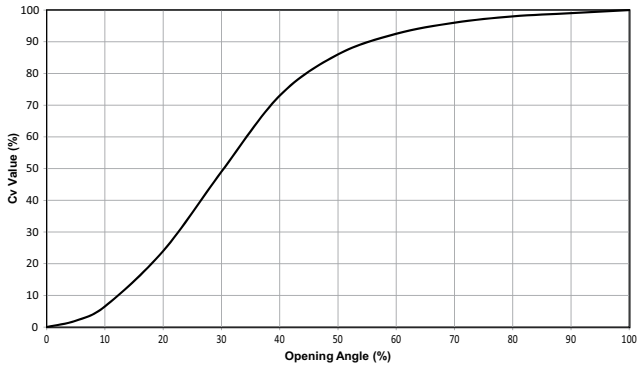

Cv Values

Size	d (mm)	Cv (gal/min)
2½	75	69.5
3	90	119.0
4	110	189.0
6	160	422.3

Dimensions

The following tables are shown in millimeters unless otherwise specified

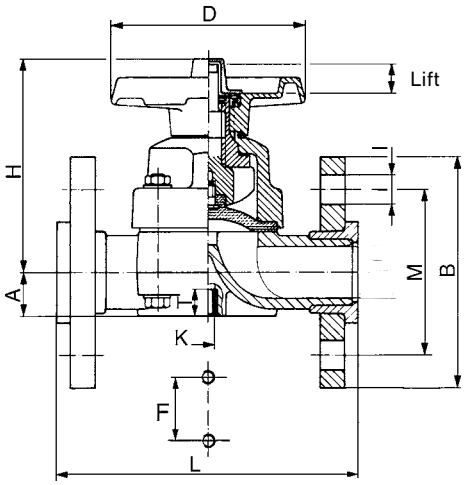

2½"

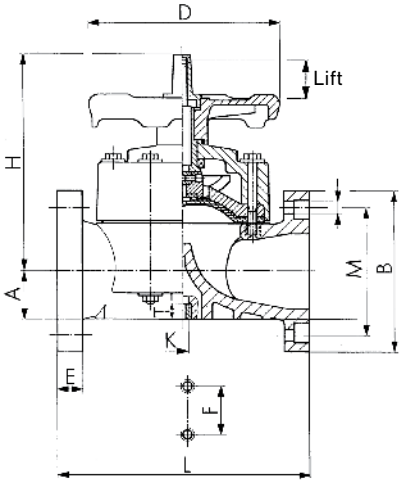

3"–4"

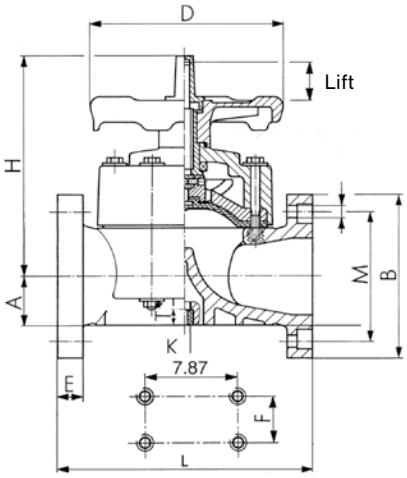

6"

PVC/PP/PVDF - ANSI Flanged

Size (inch)	A	B (inch)	D	E	H	L	M (inch)	I (inch)	No. Bolt Holes	F	K	T	Lift
2½	46	7.28	152	20	210	290	5.5	0.71	4	70	M8	15	30
3	57	7.87	270	35	265	310	6.3	0.71	4	120	M12	23	40
4	69	8.86	270	35	304	350	7.5	0.71	8	120	M12	23	50
6	108	11.22	400	35	437	480	9.5	0.91	8	100	M12	23	70

CPVC - ANSI Flanged

Size (inch)	A	B (inch)	D	E	H	L	M (inch)	I (inch)	No. Bolt Holes	F	K	T	Lift
2½	46	7.28	152	20	210	290	5.5	0.71	4	70	M8	15	30
3	57	7.87	270	35	265	310	6.3	0.71	4	120	M12	23	40
4	69	8.86	270	35	304	350	7.5	0.71	8	120	M12	23	50

Cone Check Valves
Type 561/562

General

- **Size**: ⅜"–4"
- **Material**: PVC, CPVC, PROGEF® Standard PP, ABS, SYGEF® Standard PVDF
- **Seals**: EPDM, FPM
- **Spring:** 304 stainless steel
- **End Connection**: Solvent cement socket, threaded, flanged, fusion spigot, fusion socket

Key Certifications

- **FDA CFR 21 177.1520**: PP
- **FDA CFR 21 177.2600**: EPDM and FPM
- **FDA CFR 21 177.1550**: PTFE
- **USP 25 Class VI (physiological non-toxic)**: PP
- **ABS:** All materials

Optional Features

- **Strainer**: Foot valve applications, PVC only
- **Spring**: Nimonic 90, Halar coated SS 304
- **End Connection**: Alternatives available upon request
- **Cleaned**: Silicone free/oil free

Sample Specification

The Type 561/562 Cone Check Valve shall be true union and fully serviceable. The Type 561 shall be used in vertical applications only. The Type 562 shall be used in both horizontal and vertical applications. The cone shall be stabilized by a guide rod. The carrier shall be adjustable and reverse threaded. The valve nut threads shall be of buttress type. All elastomeric seals shall be of like material. ANSI flanged versions shall meet ANSI B16.5 150lb standards. All valves shall be tested in accordance to ISO9393 and designed to ISO16137 standards. All valves shall be manufactured under ISO9001 for Quality and ISO14001 for Environmental Management. Following assembly, every valve shall be tested and certified bubble tight exceeding Class VI standards. PVC valves shall meet ASTM D1784 cell classification 12454 standards. CPVC valves shall meet ASTM D1784 cell classification 23447-B standards. PP valves shall meet ASTM D5847-14 cell classification PP0510B66851 standards. ABS valves shall meet ASTM D3965 cell classification 42222 standards. PVDF valves shall be type 1, grade 2 according to ASTM D3222 standards. Valves of all materials shall be RoHS compliant.

Components

Valve Components

Part	Description	Material
1	Valve nut	PVC, CPVC, PP, ABS or PVDF
2	Valve end	PVC, CPVC, PP, PPn, ABS, PE or PVDF
3	Face seal	EPDM or FPM
4	Carrier	PVC, CPVC, PP, ABS or PVDF
5	Cone seal	EPDM or FPM
6	Backup ring	PVC, CPVC, PP, ABS or PVDF
7	Cone	PVC, CPVC, PP-TV20, ABS or PVDF
8	Spring	304 Stainless steel
9	Valve body	PVC, CPVC, PP, ABS or PVDF

Key Design Features

The Type 561/562 Cone Check Valves are designed to optimize the flow path through the valve. The streamlined cone decreases resistance and significantly improves Cv when compared to traditional ball check valves. The internal geometry of the valve body features smooth transitions and radii, the contour is designed to direct media around the cone in order decrease pressure loss.

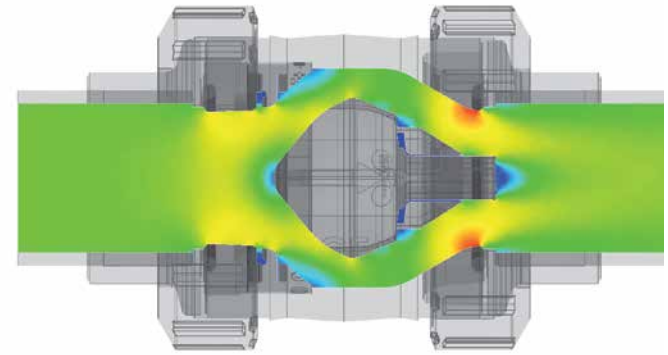

The Type 562 Cone Check Valves are designed for both vertical and horizontal applications. A spring is seated between the cone and the guide to allow the valve to properly seal in applications where a traditional ball check valve would not.

The cone is stabilized by a guide rod, which maintains a cone's position at full stroke, preventing rattling and decreasing the potential for damage.

Technical Data

System Conditions

The following information is based on water applications at 68° F

Size (inch)	d (mm)	561 Cracking (psi)	562 Cracking (psi)	561 Sealing (psi)	562 Sealing (psi)	Full Stroke (gpm)
⅜	16	0.04	0.41	2.9	1.45	2.11
½	20	0.04	0.41	2.9	1.45	2.38
¾	25	0.04	0.44	2.9	1.45	3.43
1	32	0.07	0.44	2.9	1.45	4.76
1¼	40	0.07	0.51	2.9	1.45	9.25
1½	50	0.15	0.58	2.9	1.45	18.49
2	63	0.29	0.73	2.9	1.45	26.42
2½	75	0.36	0.87	2.9	1.45	31.70
3	90	0.44	0.87	2.9	1.45	44.91
4	110	0.44	0.87	2.9	1.45	66.05

Cracking pressure is amount of pressure on the inlet side of the valve required to unseat a closed valve and allow media to begin to pass through the valve. Sealing pressure is the amount of pressure on the outlet side of the valve required to seat an open valve and seal it so no media can pass through. The full stroke flowrate is the volume of media required to maintain the ideal position of the cone in order to optimize the valve's performance.

Cone Density

Material	Density (g/cm³)
PVC	1.38
CPVC	1.50
PP-TV20 (PPh with 20% Talc)	1.05
ABS	1.03
PVDF	1.78

It is not recommended to use Type 561/562 Cone Check Valves in applications in which the media is of greater density than the cone. This will cause the cone to float, thus interfering with the valve's ability to seal properly. PP-TV20 cone used in PP valves.

Pressure Temperature Curves

The following graphs are based on a 25 year lifetime water or similar media application

PVC

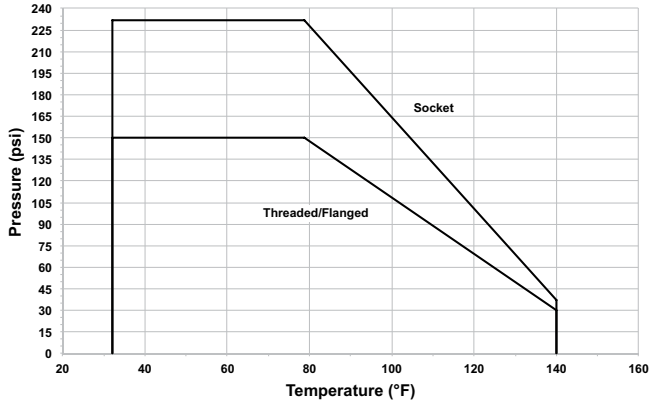

CPVC

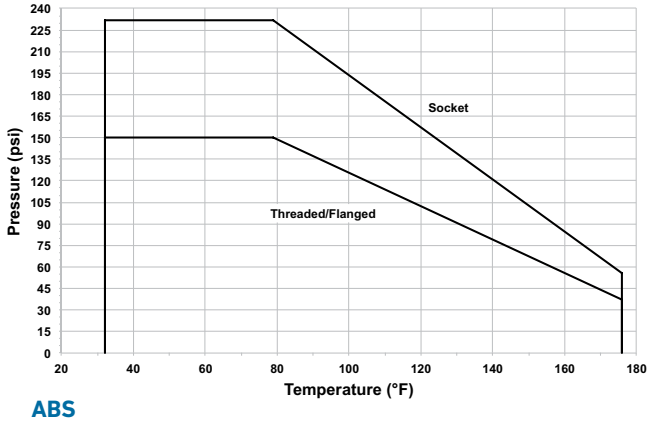

PP

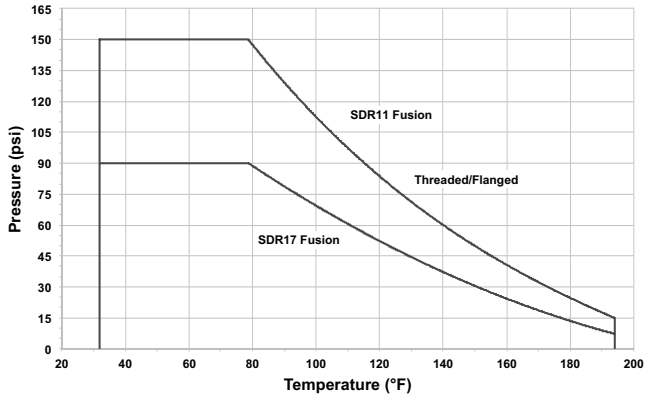

ABS

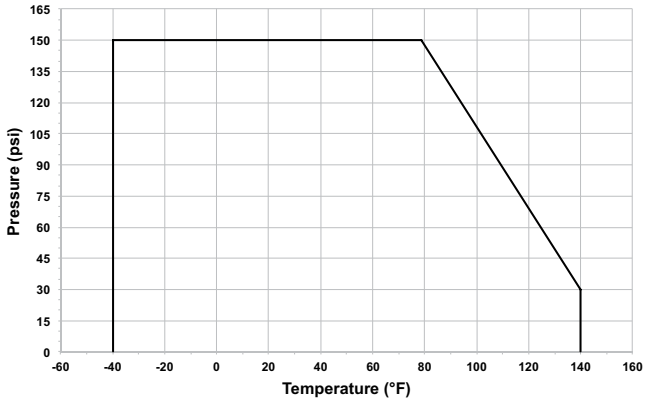

PVDF

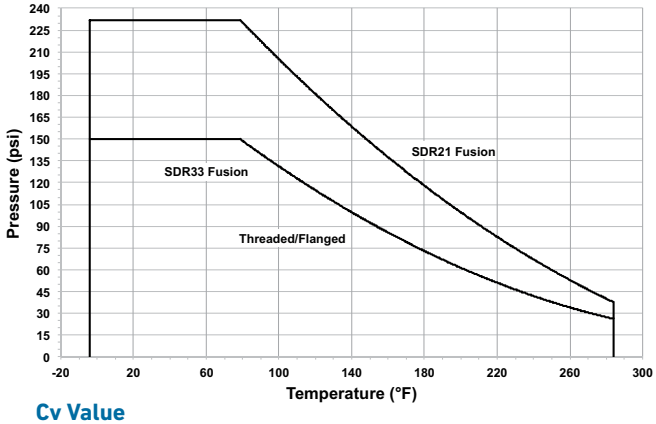

Pressure-Temperature

Material	Temperature Range (°F)	Max Pressure (psi)
PVC	32 to 140	232*
CPVC	32 to 176	232*
PP	32 to 176	150*
ABS	-40 to 140	150
PVDF	-4 to 284	232*

*Dependant on end connection as shown in P-T curves

Cv Value

Size (inch)	d (mm)	Cv (gal/min)
⅜	16	13
½	20	13
¾	25	26
1	32	32
1¼	40	59
1½	50	75
2	63	115
2½	75	204
3	90	248
4	110	286

Vacuum Service

Type 561/562 Cone Check Valves are conditionally rated for vacuum service. Please consult GF with application details before commissioning.

Dimensions

The following tables are shown in millimeters unless otherwise specified

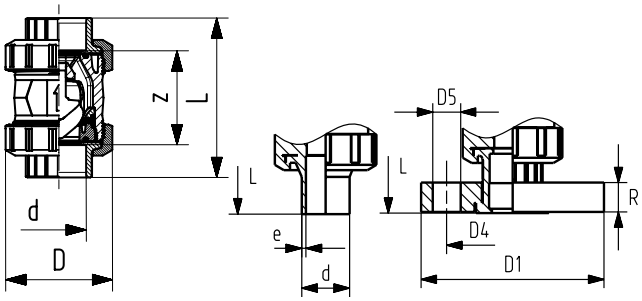

All Materials

Size (inch)	d (mm)	D
⅜	16	50
½	20	50
¾	25	58
1	32	68
1¼	40	84
1½	50	97
2	63	124
2½	75	166
3	90	200
4	110	238

PVC/CPVC

Size	IPS Socket		Threaded NPT		ANSI Flanged				
(inch)	L	z	L	z	L	D1 (inch)	D4 (inch)	D5 (inch)	R (inch)
⅜	105	67	98	69	-	-	-	-	-
½	105	61	98	65	149	3.5	2.38	0.5	0.57
¾	121	70	111	74	165	3.88	2.75	0.5	0.58
1	133	76	127	82	184	4.25	3.13	0.5	0.66
1¼	154	90	147	98	206	4.63	3.5	0.5	0.69
1½	164	94	157	110	221	5	3.88	0.5	0.76
2	183	107	183	135	251	6	4.75	0.63	0.82
2½	233	144	234	166	311	7	5.5	0.63	0.98
3	254	151	255	175	343	7.5	6	0.63	1.02
4	301	174	302	214	397	9	7.5	0.63	1.11

PP

	Metric Socket		Metric IR/Butt		Threaded NPT		ANSI Flanged				
d(mm)	L	z	L	e	L	z	L	D1 (inch)	D4 (inch)	D5 (inch)	R (inch)
16	93	67	-	-	96	71	-	-	-	-	-
20	95	66	130	1.9	99	64	166	3.74	2.36	0.63	0.63
25	109	77	143	2.3	111	76	177	4.13	2.76	0.63	0.67
32	119	83	150	2.9	127	83	191	4.53	3.11	0.63	0.71
40	135	99	171	3.7	146	100	209	5.51	3.5	0.63	0.79
50	147	105	191	4.6	157	111	229	5.91	3.86	0.63	0.87
63	168	117	220	5.8	183	134	253	6.5	4.76	0.75	0.94
75	233	167	266	6.8	-	-	416	7.28	5.51	0.75	1.02
90	254	180	264	8.2	-	-	414	7.87	5.98	0.75	1.06
110	301	215	301	10.0	-	-	451	9.02	7.48	0.75	1.1

ABS

	Metric Socket	
d (mm)	L	z
16	92	64
20	95	64
25	110	72
32	123	79
40	146	94
50	157	95
63	183	107
75	233	144
90	254	151
110	301	174

PVDF

	Metric Socket		Metric IR/Butt		Threaded NPT		ANSI Flanged				
d (mm)	L	z	L	e	L	z	L	D1 (inch)	D4 (inch)	D5 (inch)	R (inch)
16	93	67	-	-	96	69	-	-	-	-	-
20	95	66	130	1.9	99	64	174	3.74	2.36	0.63	0.63
25	109	77	143	1.9	111	76	189	4.13	2.76	0.63	0.67
32	119	83	150	2.4	127	83	199	4.53	3.11	0.63	0.71
40	135	99	171	2.4	146	101	235	5.51	3.5	0.63	0.79
50	147	105	191	3.0	157	111	243	5.91	3.86	0.63	0.87
63	168	117	220	3.0	183	135	261	6.5	4.76	0.75	0.94
75	233	167	270	3.6	-	-	426	7.28	5.51	0.75	1.02
90	254	180	265	4.3	-	-	426	7.87	5.98	0.75	1.06
110	301	215	305	5.3	-	-	487	9.02	7.48	0.75	1.1

Wafer Check Valve
Type 369

General

- **Size**: 1½"–12"
- **Material**: PVC, PP, PVDF
- **Seals**: EPDM, FPM
- **Mounting**: Suitable for vertical and horizontal mounting
- **Connection**: Both ANSI 150 and DIN 2501

Optional Features

- **Spring**: 316 SS or Hastelloy C
- **Cleaned**: Silicone free
- **Size**: 14"-24" available upon request
- **Seals**: Alternative materials available upon request

Important Note

This is not a full port valve. Opening angle is between 70-90%.

Sample Specification

The Type 369 Check Valve shall be of wafer style, compatible with both flat and serrated flange adapters and suitable for both vertical and horizontal mounting. The face seal shall be a Q-ring and the port seal shall be an O-ring. The body shall be machined and the disk shall be molded. The alignment eye bolt shall be 304 stainless steel. All valves shall be tested in accordance to ISO9393 and designed to ISO16137 standards. All valves shall be manufactured under ISO9001 for Quality and ISO14001 for Environmental Management.

Technical Data

Flange Assembly

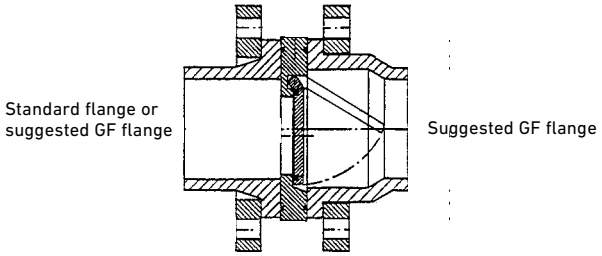

Pressure/Temperature diagram

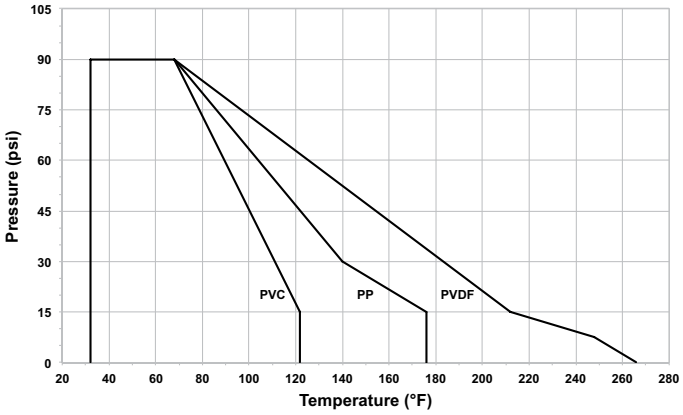

Important Installation Instructions

- A stabilizing zone of at least 5 times nominal diameter should be provided before and after the wafer check valve
- For sizes 3" and below use the next larger flange size (i.e. 2" valves require a 2½" flange)
- Direct installation on pump flange or bend not recommended
- Wafer check valves without a spring are not recommended for pulsating flows

Cv Value

Size (inch)	Cv (gal/min)		
	PVC	PP	PVDF
1½	25.9	23.8	23.8
2	63.0	42.7	42.7
2½	79.8	86.1	86.1
3	130.9	182.7	182.7
4	200.9	275.1	275.1
5	399.0	498.4	498.4
6	483.0	642.6	642.6
8	1316.0	1232.0	1232.0
10	1750.0	1708.0	1708.0
12	1932.0	2233.0	2233.0

Cracking Pressure (psi)

Size (inch)	d (mm)	Vertical w/o spring	Vertical w/ spring	Horiz. w/o spring	Horiz. w/ spring
1½	50	0.15	0.44	0.01	0.29
2	63	0.15	0.44	0.01	0.29
2½	75	0.15	0.44	0.01	0.29
3	90	0.15	0.44	0.01	0.29
4	110	0.15	0.44	0.01	0.29
6	160	0.15	0.44	0.01	0.29
8	225	0.26	0.55	0.01	0.29
10	280	0.26	0.55	0.01	0.29
12	315	0.26	0.55	0.01	0.29

Sealing Pressure (psi)

PVC	PP/PVDF
2.8	4.3
2.8	4.3
2.8	4.3
2.8	4.3
2.8	4.3
2.8	4.3
2.8	4.3
2.8	4.3
2.8	4.3

Dimensions

The following tables are shown in millimeters unless otherwise specified

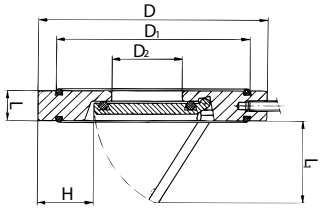

Size (inch)	d (mm)	D	D1	D2	L	L1	H
1½	50	95	72	22	16	27	28
2	63	109	86	32	18	40	29
2½	75	129	105	40	20	55	31
3	90	144	119	54	20	67	32
4	110	164	146	70	23	67	31
6	160	220	197	105	26	100	41
8	225	275	255	154	35	152	38
10	280	330	312	192	40	180	41
12	315	380	363	227	45	215	41

Ventilating and Vacuum Breaker Valves

Type 591/595

General

- **Size**: ⅜"–4"
- **Material**: PVC, CPVC, PROGEF® Standard PP, ABS, SYGEF® Standard PVDF
- **Seals**: EPDM, FPM
- **Type 595 Spring:** 304 stainless steel
- **End Connection**: Solvent cement socket, threaded, flanged, fusion spigot, fusion socket

Key Certifications

- **FDA CFR 21 177.1520**: PP
- **FDA CFR 21 177.2600**: EPDM and FPM
- **FDA CFR 21 177.1550**: PTFE
- **USP 25 Class VI (physiological non-toxic)**: PP
- **ABS**: All materials

Optional Features

- **Spring for 595**: Nimonic 90, Halar coated stainless steel
- **End Connection**: Alternatives available upon request
- **Cleaned**: Silicone free/oil free
- **Float Material for 591:** Hollow PVDF

Sample Specification

The Type 591/595 Vent and Vacuum Breaker Valves shall be true union and fully serviceable. The float shall be of conical shape and stabilized by a guide rod. The carrier shall be adjustable and reverse threaded. The valve nut threads shall be of buttress type. All elastomeric seals shall be of like material. ANSI flanged versions shall meet ANSI B16.5 150lb standards. All valves shall be tested in accordance to ISO9393 and designed to ISO16137 standards. All valves shall be manufactured under ISO9001 for Quality and ISO14001 for Environmental Management. Following assembly, every valve shall be tested and certified bubble tight exceeding Class VI standards. PVC valves shall meet ASTM D1784 cell classification 12454 standards. CPVC valves shall meet ASTM D1784 cell classification 23447-B standards. PP valves shall meet ASTM D5847-14 cell classification PP0510B66851 standards. ABS valves shall meet ASTM D3965 cell classification 42222 standards. PVDF valves shall be type 1, grade 2 according to ASTM D3222 standards. Valves of all materials shall be RoHS compliant.

Components

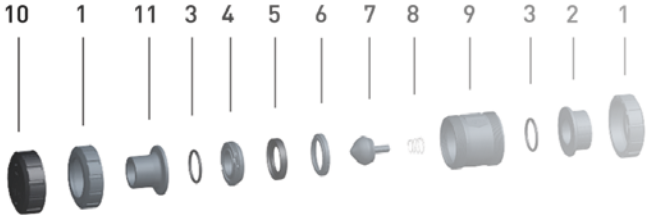

Type 595 Valve Components

Part	Description	Material
1	Valve nut	PVC, CPVC, PP, ABS or PVDF
2	Valve end	PVC, CPVC, PP, PPn, ABS, PE or PVDF
3	Face seal	EPDM or FPM
4	Carrier	PVC, CPVC, PP, ABS or PVDF
5	Cone seal	EPDM or FPM
6	Backup ring	PVC, CPVC, PP, ABS or PVDF
7	Float	PVC, CPVC, PP, ABS or PVDF
8	Spring	304 Stainless steel
9	Valve body	PVC, CPVC, PP, ABS or PVDF
10	Cap	Glass-filled PP
11	Cap end	PVC, CPVC, PP, ABS or PVDF

Type 591 Valve Components

Part	Description	Material
1	Valve nut	PVC, CPVC, PP, ABS or PVDF
2	Valve end	PVC, CPVC, PP, PPn, ABS, PE or PVDF
3	Face seal	EPDM or FPM
4	Carrier	PVC, CPVC, PP, ABS or PVDF
5	Cone seal	EPDM or FPM
6	Backup ring	PVC, CPVC, PP, ABS or PVDF
7	Float	PP or PVDF
9	Valve body	PVC, CPVC, PP, ABS or PVDF
10	Cap	Glass-filled PP
11	Cap end	PVC, CPVC, PP, ABS or PVDF

Optional Features

Float

The Type 595 utilizes floats constructed of the same material as the valve body because the buoyancy of the float is independent of the valve's functionality. Standard Type 591 valve constructed of PVC, CPVC, ABS or PP utilize a float constructed of PP because the specific gravity of PP is 0.91, making it buoyant in water. In the case of chemical resistance conflicts with a PP float, a float constructed of another standard material (PVC, CPVC, or ABS) can be substituted under the condition that the media is of higher density than the substitution material. Another option is to utilize the hollow PVDF float, however this option is only available for use with PVC, CPVC and ABS valves sizes 1"-4" (d32-d110).

Solid Float Density

Material	Density (g/cm³)
PVC	1.38
CPVC	1.50
PP	0.91
PP-TV20 (PPh with 20% Talc)	1.05
ABS	1.03
PVDF	1.78

It is not recommended to use Type 561/562 Cone Check Valves in applications in which the media is of greater density than the cone. This will cause the cone to float, thus interfering with the valve's ability to seal properly. PP-TV20 cone used in PP valves.

Buoyancy: Hollow PVDF Float

Size	d (mm)	Buoyancy (N)
⅜	16	0.02
½	20	0.02
¾	25	0.04
1	32	0.09
1¼	40	0.09
1½	50	0.13
2	63	0.18
2½	75	0.68
3	90	1.38
4	110	3.13

Definition Valve Function

The Type 591 and 595 are designed for ventilation and vacuum breaker applications. Ventilation being defined as allowing gas out of a system and vacuum breaker being defined as allowing air into a system. The purpose of venting is to allow media to fill the system so it can function properly. The purpose of a vacuum breaker is to allow a system to drain or maintain atmospheric pressure in an previously drained system.

1.

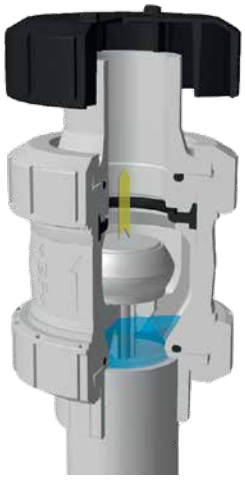

2.

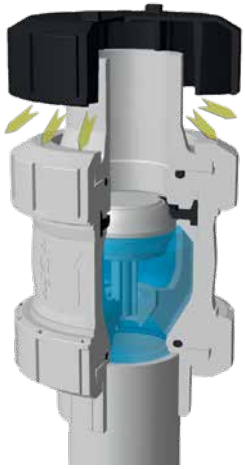

3.

4.

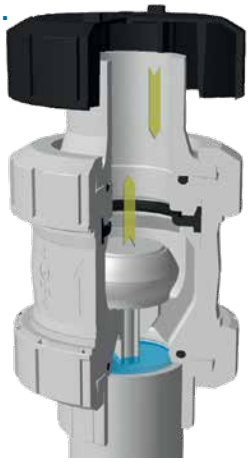

The Type 591 Valve can be used for vent applications. When the line is not pressurized and filled with air, the valve will remain open. Upon start up, media will begin to fill the system and air will be vented out of the valve[1]. When media reaches the valve, the float will rise to the seat and seal the valve[2]. The system will then begin to pressurize. Even if gas is introduced into a working system and completely fills a closed valve body, the float will remain sealed in a positively pressurized system. Negative pressure within the valve cavity is required to unseat the float[3] and allow the system to drain[4]. Therefore, the valve will not continuously vent air while a system is in operation, it will only function as a vent valve during system start up.

5.

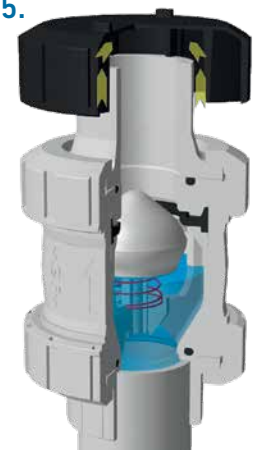

6.

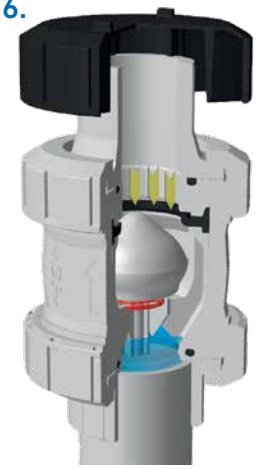

7.

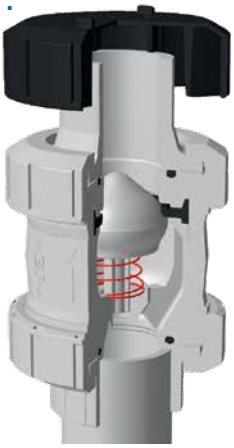

8.

Both The Type 591 and Type 595 can be used in vacuum breaker applications. When a system is being drained, air must be allowed into a system. Draining a system will cause negative pressure at high points in the system[5]. This negative pressure will unseat the cone and allow air to pass through the valve and into the system[6]. The 595 is designed primarily for the protection against vacuums from building in systems by opening when negative pressure builds[8] without continuously open those system to atmosphere. The difference between a 591 and 595 is that the 595 utilizes a spring that will re-close the valve once the vacuum is broken[7] and the 591 will remain open until the system is restarted.

Technical Data

Pressure Temperature Curves

The following graphs are based on a 25 year lifetime water or similar media application

PVC

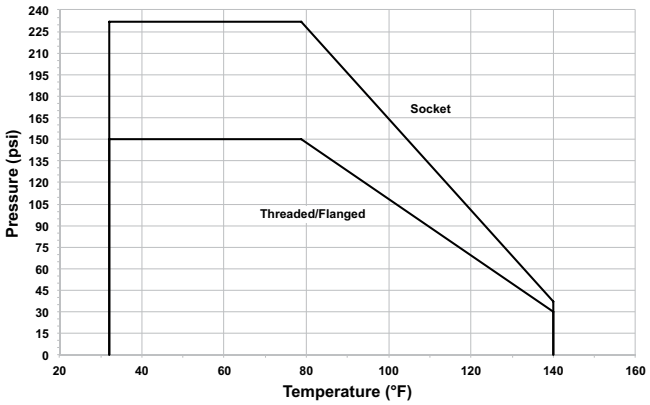

CPVC

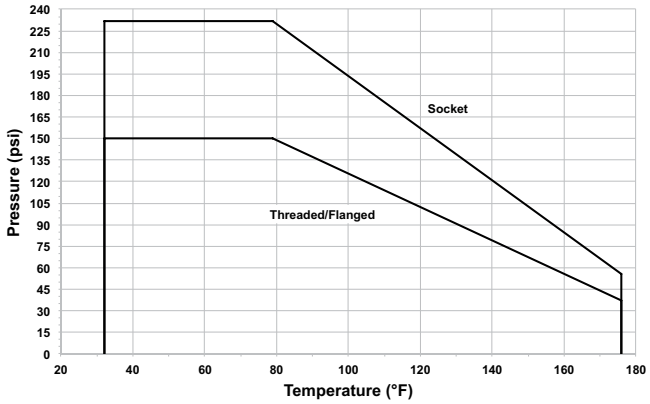

PP

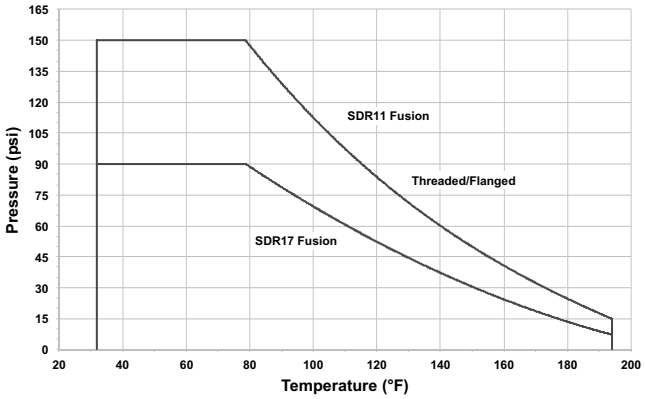

ABS

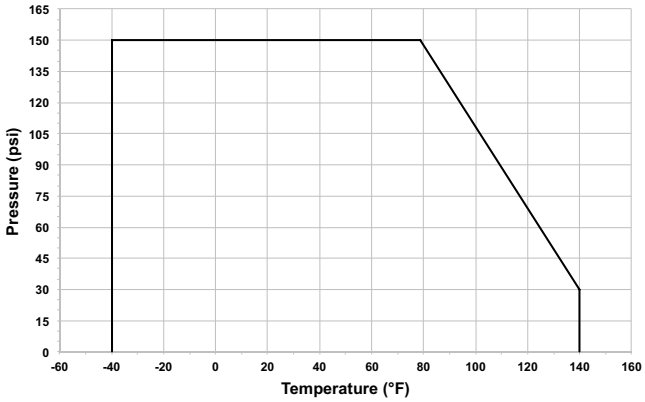

PVDF

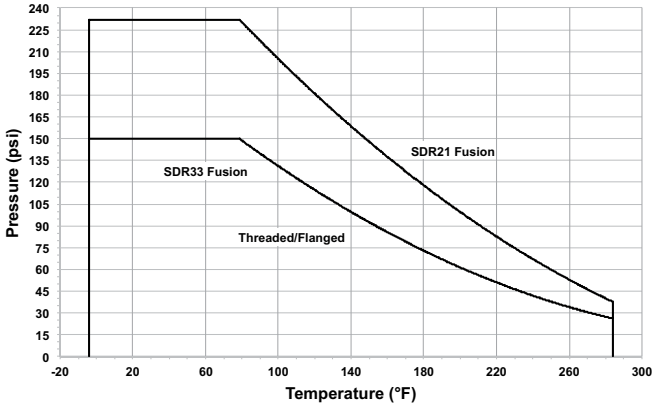

Pressure-Temperature

Material	Temperature Range (°F)	Max Pressure (psi)
PVC	32 to 140	232*
CPVC	32 to 176	232*
PP	32 to 176	150*
ABS	-40 to 140	150
PVDF	-4 to 284	232*

*Dependant on end connection as shown in P-T curves

System Conditions

Size (inch)	d (mm)	591 Cracking (psi)	595 Cracking (psi)	591 Sealing (psi)	595 Sealing (psi)
⅜	16	0.04	0.41	2.9	1.45
½	20	0.04	0.41	2.9	1.45
¾	25	0.04	0.44	2.9	1.45
1	32	0.07	0.44	2.9	1.45
1¼	40	0.07	0.51	2.9	1.45
1½	50	0.15	0.58	2.9	1.45
2	63	0.29	0.73	2.9	1.45
2½	75	0.36	0.87	2.9	1.45
3	90	0.44	0.87	2.9	1.45
4	110	0.44	0.87	2.9	1.45

Cracking pressure is amount of pressure on the inlet side of the valve required to unseat a closed valve and allow media to begin to pass through the valve. Sealing pressure is the amount of pressure on the outlet side of the valve required to seat an open valve and seal it so no media can pass through. The full stroke flowrate is the volume of media required to maintain the ideal position of the cone in order to optimize the valve's performance.

Air Flow Data

The following is based on air applications as 68°F. It is not recommend to exceed a velocity of 65 ft/s; 30–50 ft/s is ideal.

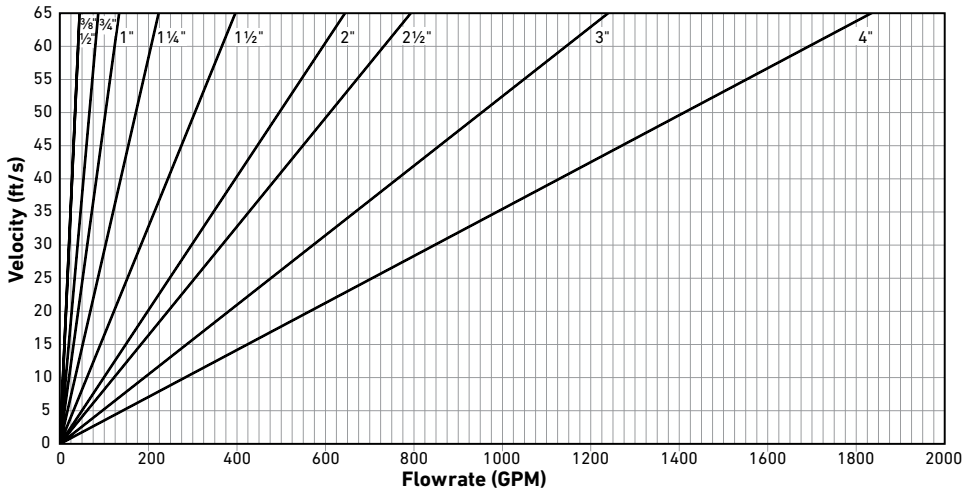

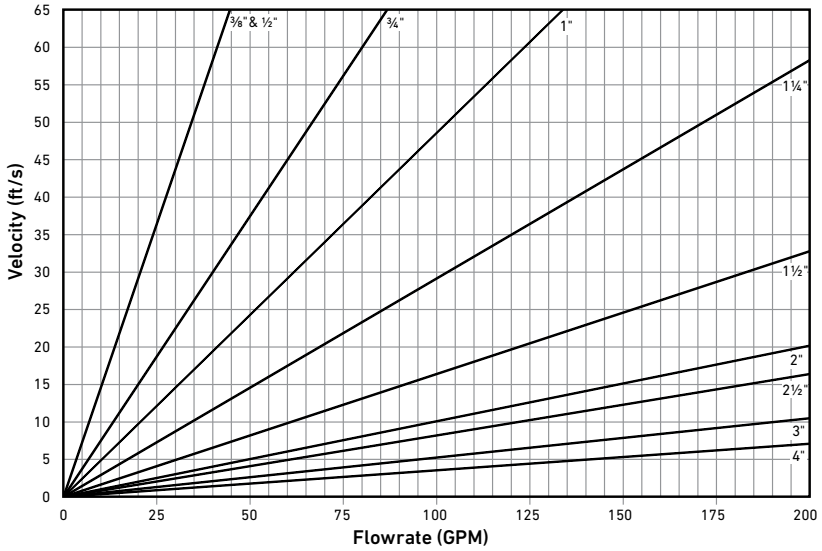

Maximum Flowrate

Size (inch)	d (mm)	Q (gpm)
⅜	16	45
½	20	45
¾	25	87
1	32	134
1¼	40	223
1½	50	396
2	63	644
2½	75	793
3	90	1239
4	110	1831

Dimensions

The following tables are shown in millimeters unless otherwise specified

All Materials

Size (inch)	d (mm)	D
⅜	16	50
½	20	50
¾	25	58
1	32	68
1¼	40	84
1½	50	97
2	63	124
2½	75	166
3	90	200
4	110	238

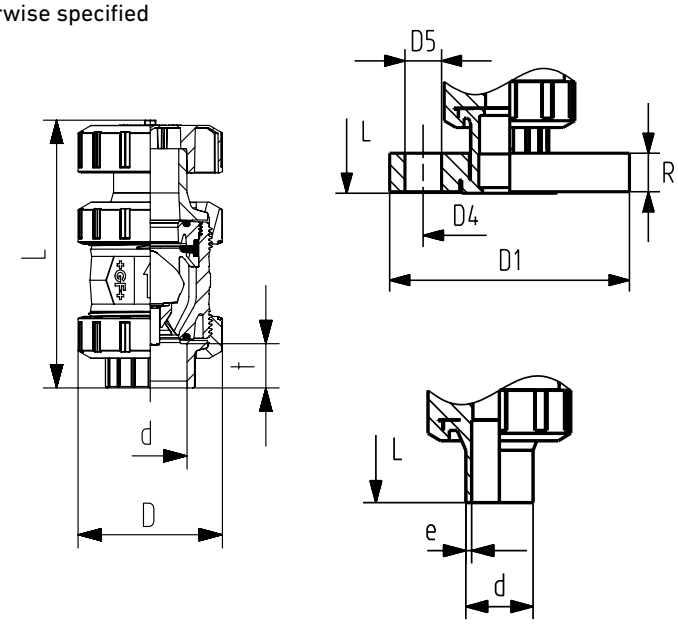

PVC/CPVC

	IPS Socket		Threaded NPT		ANSI Flanged				
Size (inch)	L	t	L	t	L	D1 (inch)	D4 (inch)	D5 (inch)	R (inch)
⅜	111	19	108	18	-	-	-	-	-
½	119	23	116	21	141	3.5	2.38	0.5	0.57
¾	137	25	132	23	159	3.88	2.75	0.5	0.58
1	152	28	149	25	177	4.25	3.13	0.5	0.66
1¼	176	31	173	27	202	4.63	3.5	0.5	0.69
1½	193	35	189	27	221	5	3.88	0.5	0.76
2	229	38	229	24	263	6	4.75	0.63	0.82
2½	258	45	259	34	297	7	5.5	0.63	0.98
3	277	48	228	36	322	7.5	6	0.63	1.02
4	320	58	321	38	368	9	7.5	0.63	1.11

ABS

	Socket	
d (mm)	L	t
16	126	14
20	127	16
25	142	18
32	155	22
40	177	26
50	195	31
63	227	38
75	256	45
90	275	52
110	318	64

PP/PVDF

	Metric Socket			Metric IR/Butt		
d (mm)	L	t (PP)	t (PVDF)	L	e (PP)	e (PVDF)
16	126	14	14	-	-	-
20	127	15	15	140	1.9	1.9
25	142	16	16	157	2.3	1.9
32	153	18	18	168	2.9	2.4
40	171	19	19	189	3.7	2.4
50	190	21	21	211	4.6	3.0
63	219	28	28	245	5.8	3.0
75	256	29	29	280	6.8	3.6
90	275	33	33	296	8.2	4.3
110	318	39	39	336	10.0	5.3

Needle Valve
Type 522

General

- **Size:** ¼"– ½"
- **Material:** Glass-filled PP, PVDF Standard, PVDF-HP
- **Body:** Angle, globe
- **Connection:** Female NPT
- **Seat:** PTFE
- **Mounting Surface Thickness:** Panel 1⁄32" to ½"
- **Metering Thread:** 24 pitch

Optional Features

- **Material:** PVC, CPVC

Material Specification

PP valves shall meet ASTM D4101 Type 1 homopolymer standards. PVDF valves shall meet ASTM D3222 as pertaining to natrual, unpigmented, virgin, noncompounded PVDF. Valves of all materials shall be tested in accordance to ASTM D638, ASTM D790 and be RoHS compliant.

Sample Specification

The Type 522 Needle Valve shall be available in sizes ¼", ⅜", or ½" with female NPT connections in accordance with ASTM D2464, ANSI B1.20. The body shall be of either angle or globe orientations with flow control being unidirectional but dual blocking capabilities. A embossed arrow shall indicate correct flow direction. Wetted thermoplastic components shall be of either PVDF or glass-filled PP material construction. High purity versions shall be cleaned and double bagged in Class 10,000 cleanroom environment. The seat material shall be PTFE. An integrated jam nut and threaded body shall provide a panel mount to a flat surface with a thickness of between 1⁄32" to ½". All valves shall be manufactured under ISO9001 for Quality and ISO14001 for Environmental Management.

Technical Data

Pressure Temperature Curves

The following graphs are based on a 25 year lifetime water or similar media application

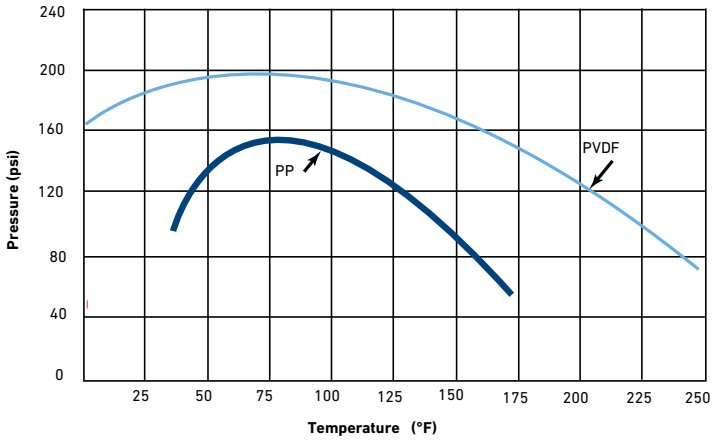

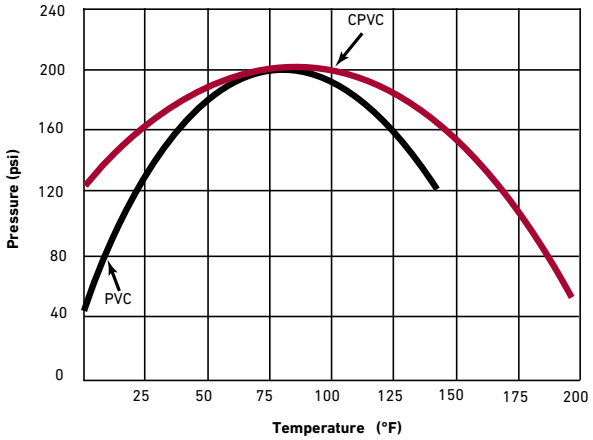

Dimensions

The following tables are shown in inches unless otherwise specified

Size (inch)	Angle Body					Globe Body			
	Inlet	Outlet	B	C	Cv	A	Inlet	Outlet	Cv
¼	0.25	0.187	1.10	1.10	0.426	2.28	0.187	0.187	0.310
⅜	0.25	0.187	1.22	1.22	0.426	2.33	0.187	0.187	0.310
½	0.25	0.218	1.28	1.28	0.780	2.59	0.218	0.218	0.620

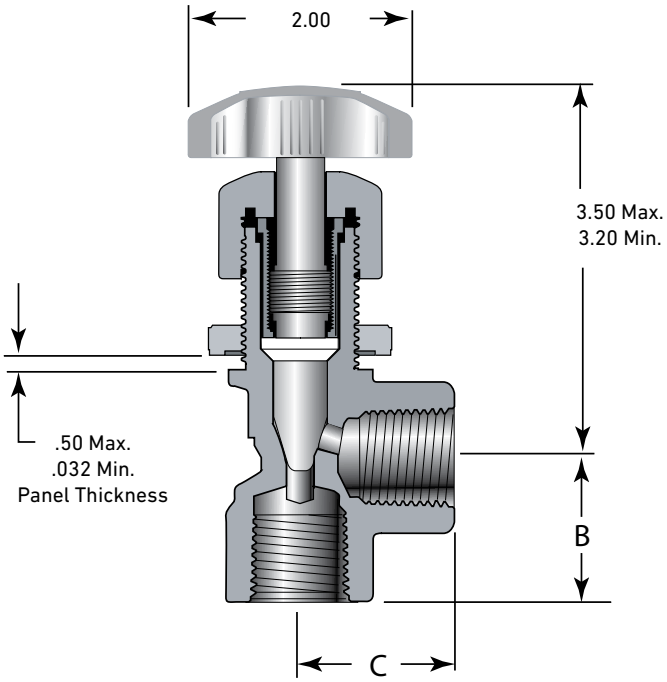

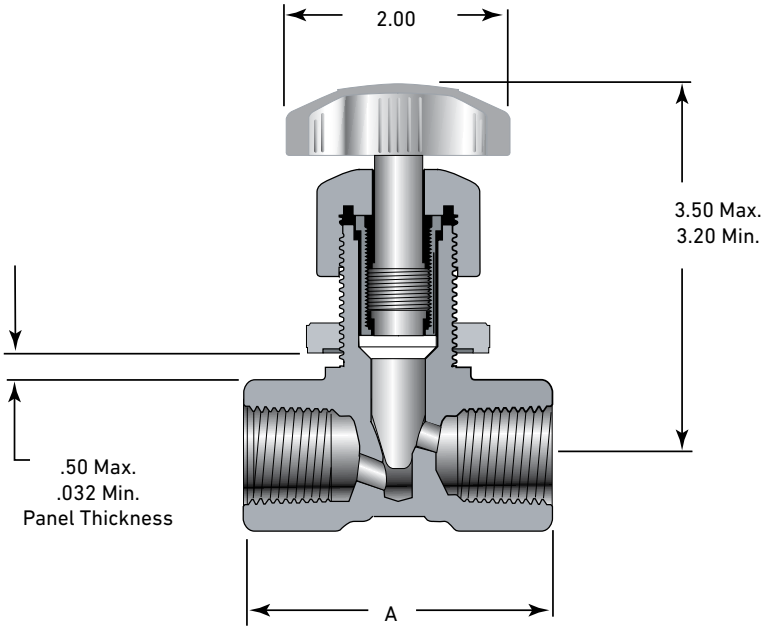

Electrically Actuated Ball Valve
Type 127

General

- **Size**: ⅜"-2"
- **Material**: PVC, CPVC, ABS
- **Seat**: PTFE
- **Seals**: EPDM or FPM
- **End Connection**: Solvent cement socket, threaded, flanged
- **Actuator Housing**: Glass-filled PP
- **Voltage**: 100-230VAC
- **Protection Class**: IP67
- **Mounting**: Stainless steel threaded inserts
- **Manual Override**: Integrated
- **Position Feedback**: Open/close, bistable relay
- **Optical Position Indicator**: Integrated, LED enforced

Key Valve Certifications

- **NSF 61**: PVC and CPVC
- **FDA CFR 21 177.2600**: EPDM and FPM
- **FDA CFR 21 177.1550**: PTFE
- **ABS**: All materials

Sample Speciation

The Type 127 Ball Valve shall be used in open/close applications. The actuator shall be a Type EA15 with integrated adjustable heating element and open/close position feedback via two bistable relays. The ball valve shall be true union and utilize a floating ball design. A 7-segment display shall communicate specific fault status. The ball shall be fully molded and full port with two way blocking capability. The stem shall be blowout proof, utilizing a double o-ring seal and a predetermined break point opposite the media side of the stem seals. The seat carrier shall be adjustable and reverse threaded. The valve nut threads shall be of buttress type. Ball seats shall have an elastomeric backing o-ring and all elastomeric seals shall be of like material. ANSI flanged versions shall meet ANSI B16.5 150lb standards. All valves shall be tested in accordance to ISO9393 and designed to ISO16135 standards. All valves shall be manufactured under ISO9001 for Quality and ISO14001 for Environmental Management. Following assembly, every valve shall be tested and certified bubble tight exceeding Class VI standards

Material Specification

PVC valves shall meet ASTM D1784 cell classification 12454 standards. CPVC valves shall meet ASTM D1784 cell classification 23447-B standards. ABS valves shall meet ASTM D3965 cell classification 42222 standards. Valves of all materials shall be RoHS compliant.

Optional Features

- **Fail Safe Return**: Battery back-up, internal or external
- **Manual Loading Station**: Local control box
- **Vented Ball**: For sodium hypochlorite use
- **Voltage**: 24VAC/DC

Key Actuator Certifications

- **CE 2006/42/EC, Annex II B:** EA15
- **CE 2004/108/CE**: EA15
- **CE 2006/95/CE**: EA15
- **UL 61010-1**: EA15
- **CSA C22.2 N0. 61010-1**: EA15

Components

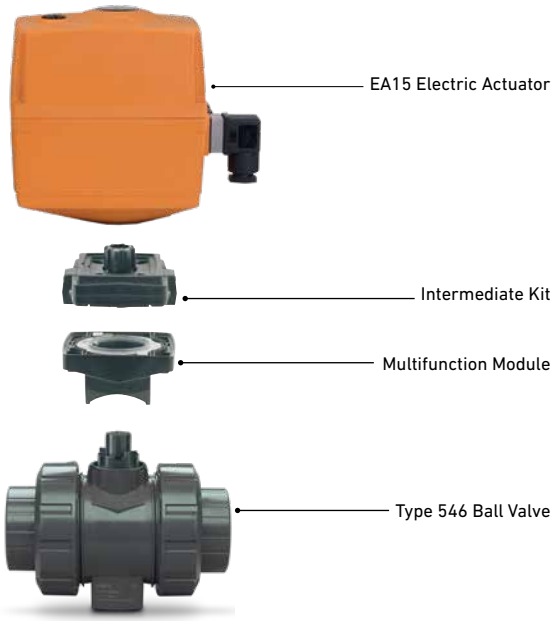

Actuator Technical Data

	EA 15
Cycle Time	5s/90°
Cycles at 70°F	150,000
Housing Material	Glass-filled PP
Position Indicator	Optical, integrated LED for visual communication of position and actuator status
Emergency Manual Override	Integrated
Rated Voltage	100–230VAC, 50/60 Hz
Rated Voltage Tolerance	+/- 15%
Nominal Output	35VA
Calculated Current Draw	0.3A @ 100VAC 0.13A @ 230VAC
Duty Cycle	40%
Position Feedback	Bi-stable, 250V, 2A
Protection Class	IP67 per EN 60529 UL/CSA: For interior use NEMA 4X
Overload Protection	Resetting (1)
Overvoltage Category	Category II according to DIN EN 61010-1
Power Connection	Connector plug 3 P+ E per DIN EN 175301-03
Pollution Grade	Grade 2 according to DIN EN 61010-1
Maximum Elevation	6561 feet
Ambient Temperature	14°F to 122°F (2)
Allowable Humidity	90% relative humidity, non condensing

(1) Overload protection of the motor is dimensioned so that the motor and the power supply board are protected. As soon as the load is within the torque range, the actuator will begin operating again.
(2) At temperatures below 14°F and if there is condensation, the heating element should be activated.

Technical Data

Pressure Temperature Curves

The following graphs are based on a 25 year lifetime water or similar media application

PVC

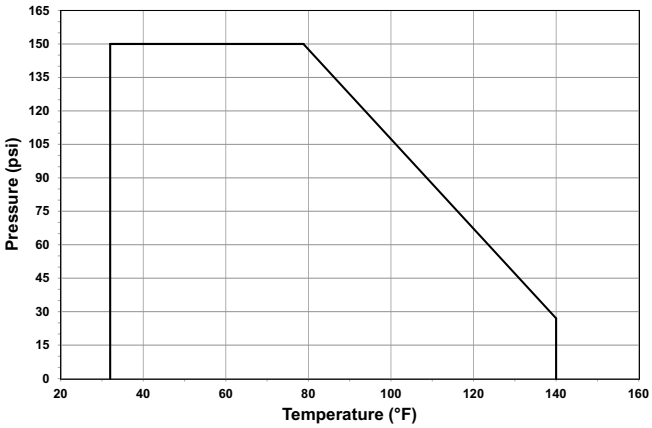

CPVC

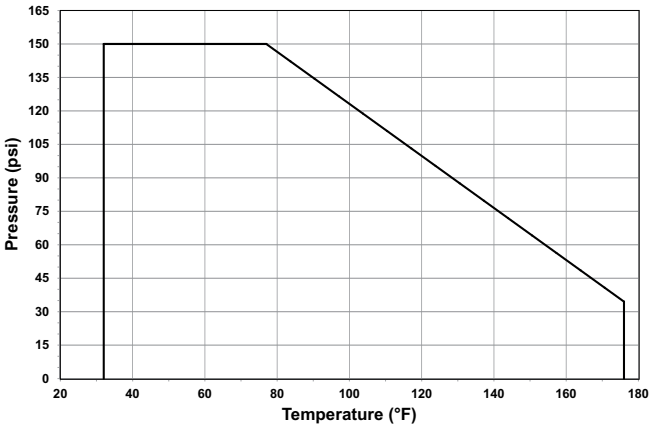

ABS

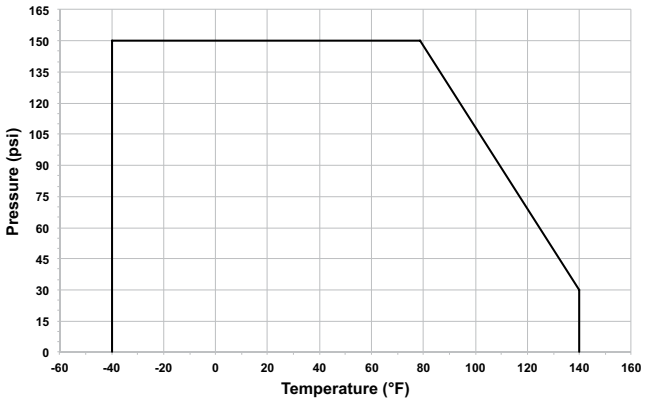

Pressure-Temperature

Material	Temperature Range (°F)	Max Pressure (psi)
PVC	32 to 140	150
CPVC	32 to 176	150
ABS	-40 to 140	150

Vacuum Service

The Type 127 is rated for full vacuum service. Maximum differential pressure of 15psi at 122°F.

Flow

The following information is based on water applications at 68° F

Cv Value

Size (inch)	d (mm)	Cv (gal/min)
⅜	16	5
½	20	13
¾	25	25
1	32	49
1¼	40	70
1½	50	112
2	63	217

Wiring

Control

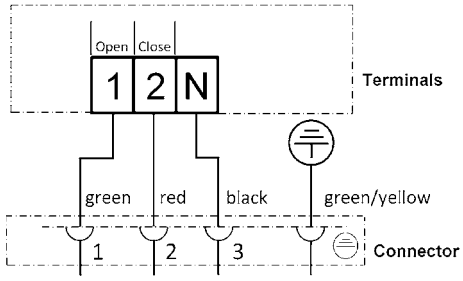

Feedback

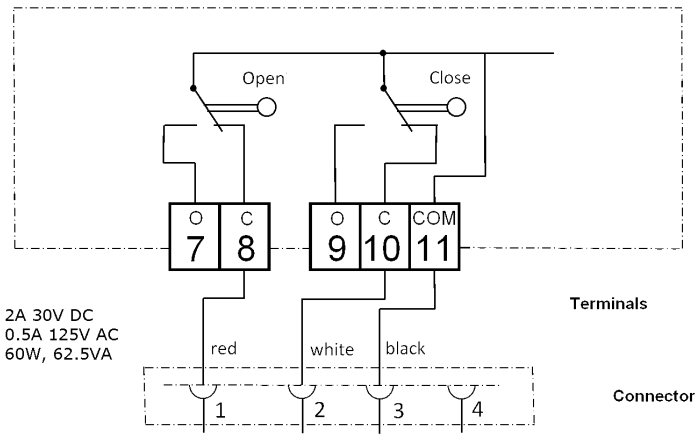

Dimensions

The following tables are shown in millimeters unless otherwise specified

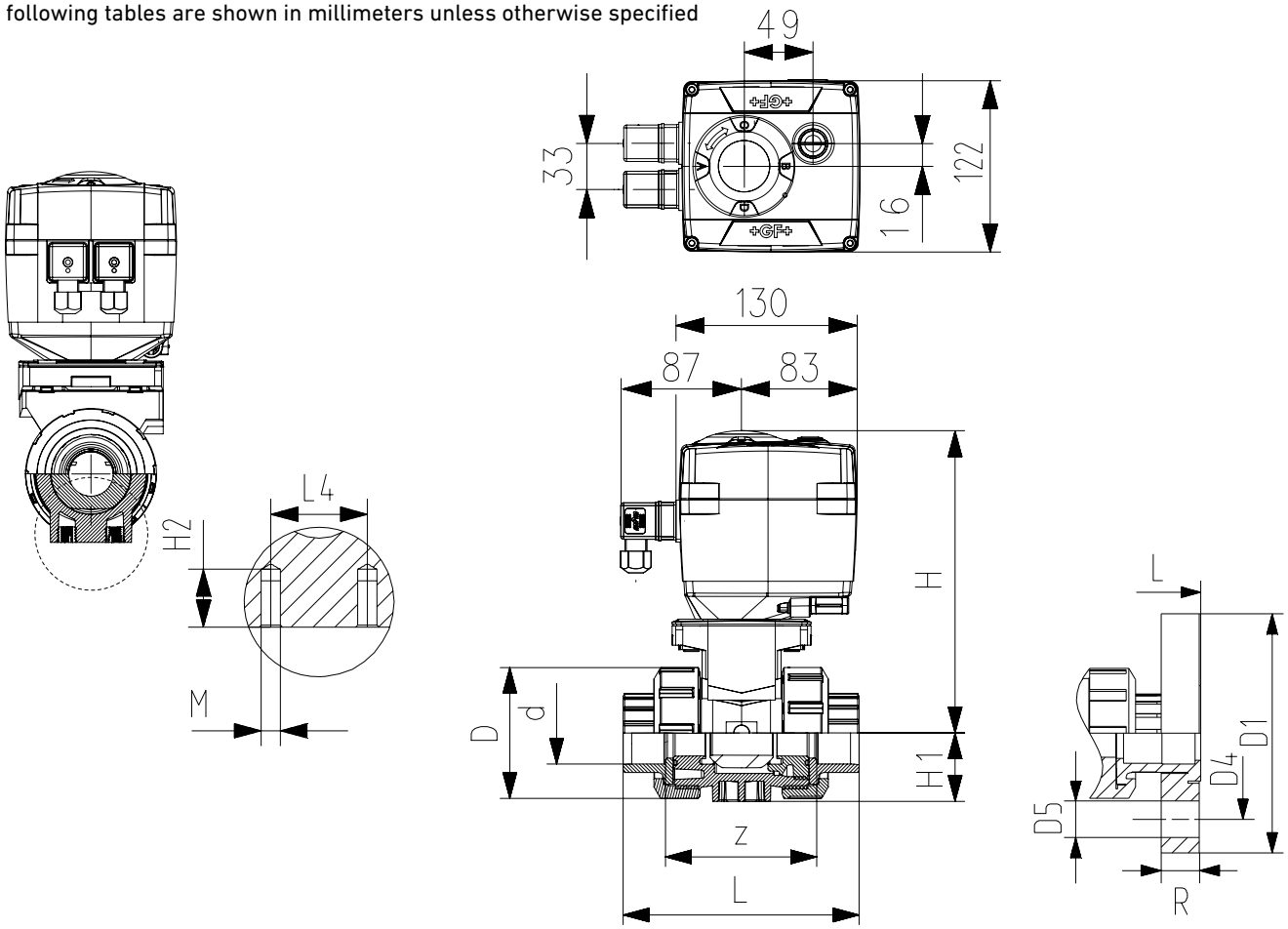

All Materials

Size (inch)	d (mm)	D	H	H1	H2	L4	M
⅜	16	50	201	27	12	25	M6
½	20	50	201	27	12	25	M6
¾	25	58	210	30	12	25	M6
1	32	68	210	36	12	25	M6
1¼	40	84	221	44	16	45	M8
1½	50	97	221	51	16	45	M8
2	63	124	243	64	16	45	M8

PVC/CPVC

Size	IPS Socket		Threaded NPT		ANSI Flanged				
(inch)	L	z	L	z	L	D1 (inch)	D4 (inch)	D5 (inch)	R (inch)
⅜	105	67	98	69	-	-	-	-	-
½	105	61	98	65	149	3.5	2.38	0.63	0.57
¾	121	70	111	74	165	3.88	2.75	0.63	0.58
1	133	76	127	82	184	4.25	3.13	0.63	0.66
1¼	154	90	147	98	206	4.63	3.5	0.63	0.69
1½	164	94	157	110	221	5	3.88	0.63	0.76
2	183	107	183	135	251	6	4.75	0.75	0.82

ABS

	Metric Socket	
d (mm)	L	z
16	92	64
20	95	64
25	110	72
32	123	79
40	146	94
50	157	95
63	183	107

Electrically Actuated 3-Way Ball Valve

Type 125/128

General

- **Size**: ⅜"–2"
- **Material**: PVC, CPVC
- **Seat**: PTFE
- **Seals**: EPDM, FPM
- **End Connection**: Solvent cement socket, threaded, flanged
- **Actuator Housing**: Glass-filled PP
- **Voltage**: 100-230VAC
- **Manual Override**: Integrated
- **Position Indicator**: Optical, integrated

Key Valve Certifications

- **FDA CFR 21 177.2600**: EPDM and FPM
- **FDA CFR 21 177.1550**: PTFE

Material Specification

PVC valves shall meet ASTM D1784 cell classification 12454 standards. CPVC valves shall meet ASTM D1784 cell classification 23447-B standards. Valves of all materials shall be RoHS compliant.

Sample Specification

The Type 125/128 3-way Ball Valve shall be used in open/close applications. The actuator shall be a Type EA15. The ball valve shall be true union and utilize a floating ball design. The ball shall be fully molded and full port with two way blocking capability. The stem shall be blowout proof, utilizing a double o-ring seal and a predetermined break point opposite the media side of the stem seals. The seat carrier shall be adjustable and reverse threaded. The valve nut threads shall be of buttress type. Ball seats shall have an elastomeric backing o-ring and all elastomeric seals shall be of like material. ANSI flanged versions shall meet ANSI B16.5 150lb standards. All valves shall be tested in accordance to ISO9393 and designed to ISO16135 standards. All valves shall be manufactured under ISO9001 for Quality and ISO14001 for Environmental Management. Following manual assembly, every valve shall be tested and certified bubble tight exceeding Class VI standards. Following actuated assembly, every valve shall be tested to confirm functionality.

Key Actuator Certifications

- Machinery Directive 2006/42/EC, Annex II B
- EMV Directive CE 2004/108/CE
- EMV VDE 0843 Section 20
- Low Voltage Directive CE 2006/95/CE
- Vibration Testing EN 60068-2-6
- Interface ISO 5211
- Actuators for Industrial Valves EN 15714-2

Wiring Diagrams

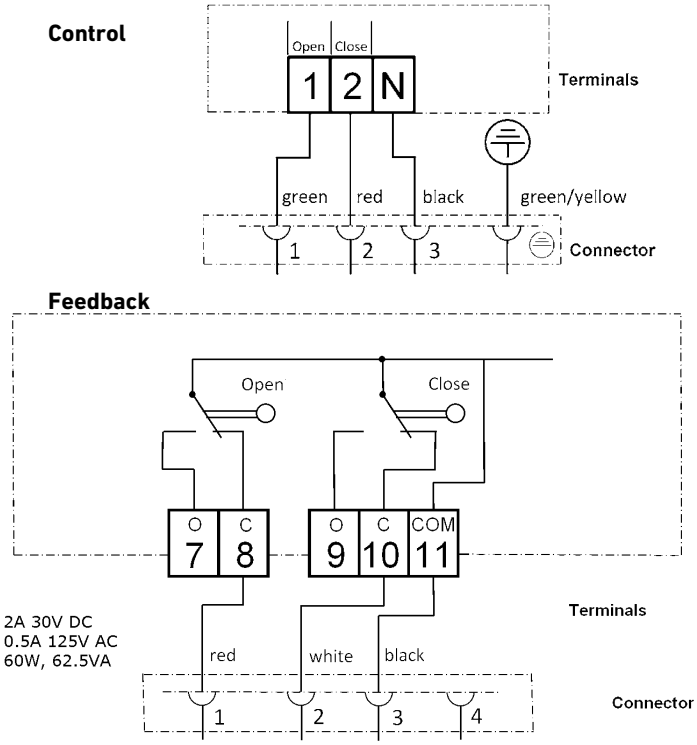

Definition of Valve Style

Horizontal **Vertical**

Definition of Valve Type

- **Type 125:** PVC/CPVC horizontal
- **Type 128:** PVC vertical

Material Availability

Material	Horizontal	Vertical
PVC	All Sizes	All Sizes
CPVC	All Sizes	-

Components

Actuator Technical Data

	EA 15
Cycle Time	5s/90°
Cycles at 70°F	150,000
Housing Material	Glass-filled PP
Position Indicator	Optical, integrated LED for visual communication of position and actuator status
Emergency Manual Override	Integrated
Rated Voltage	100–230VAC, 50/60 Hz
Rated Voltage Tolerance	+/- 15%
Nominal Output	35VA
Calculated Current Draw	0.3A @ 100VAC 0.13A @ 230VAC
Duty Cycle	40%
Position Feedback	Bi-stable, 250V, 2A
Protection Class	IP67 per EN 60529, UL/CSA: For interior use, NEMA 4X
Ambient Temperature	14°F to 122°F (2)
Allowable Humidity	90% relative humidity, non condensing

(1) Overload protection of the motor is dimensioned so that the motor and the power supply board are protected. As soon as the load is within the torque range, the actuator will begin operating again.
(2) At temperatures below 14°F and if there is condensation, the heating element should be activated.

Pressure Temperature Curves

The following graphs are based on a 25 year lifetime water or similar media application

PVC

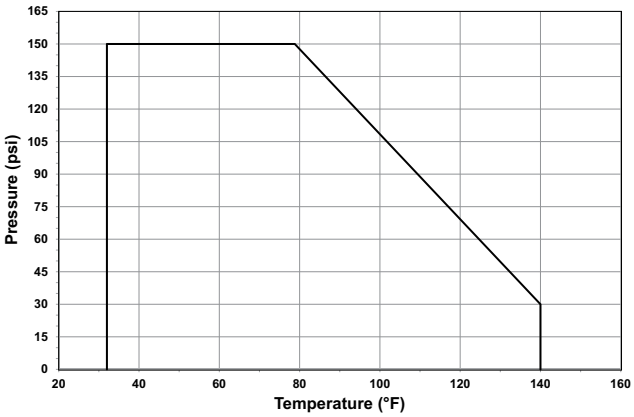

CPVC

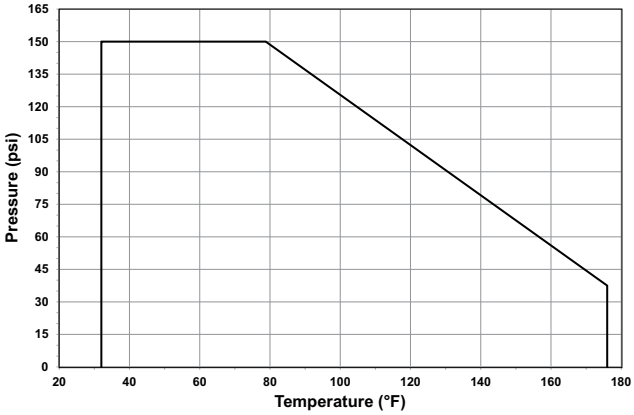

Flow

Porting options shown turning the valve rotating clockwise. Redundant and intermediate positions not shown.

Vertical Diverter

0°

90°

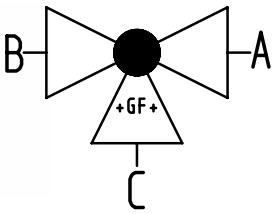

Vertical L-port

0°

90°

180°

Horizontal L-port

0°

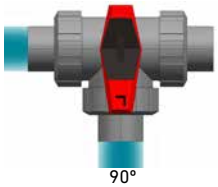

90°

Horizontal T-port

0°

90°

180°

270°

Vertical: Cv Value (gal/min)

Size (inch)	d (mm)	A-C or B-C
⅜	16	3.5
½	20	5.3
¾	25	10.5
1	32	19.6
1¼	40	33.6
1½	50	43.4
2	63	86.1

Horizontal L-port: Cv Value (gal/min)

Size (inch)	d (mm)	A-B	C-B or C-A	B-C or A-C
⅜	16	0.7	3.5	3.5
½	20	1.1	4.5	4.5
¾	25	2.1	10.5	10.5
1	32	3.5	19.6	19.6
1¼	40	6.3	33.6	33.6
1½	50	7.7	43.4	43.4
2	63	15.4	86.1	86.1

Horizontal T-port: Cv Value (gal/min)

Size (inch)	d (mm)	A-B	C-B or C-A	B-C or A-C
⅜	16	9.8	2.5	2.8
½	20	14	3.5	4.9
¾	25	32.9	9.1	10.5
1	32	55.5	14	17.5
1¼	40	90.3	26.6	32.9
1½	50	133.7	32.9	42
2	63	217	62.3	84.7

Dimensions

The following tables are shown in millimeters unless otherwise specified

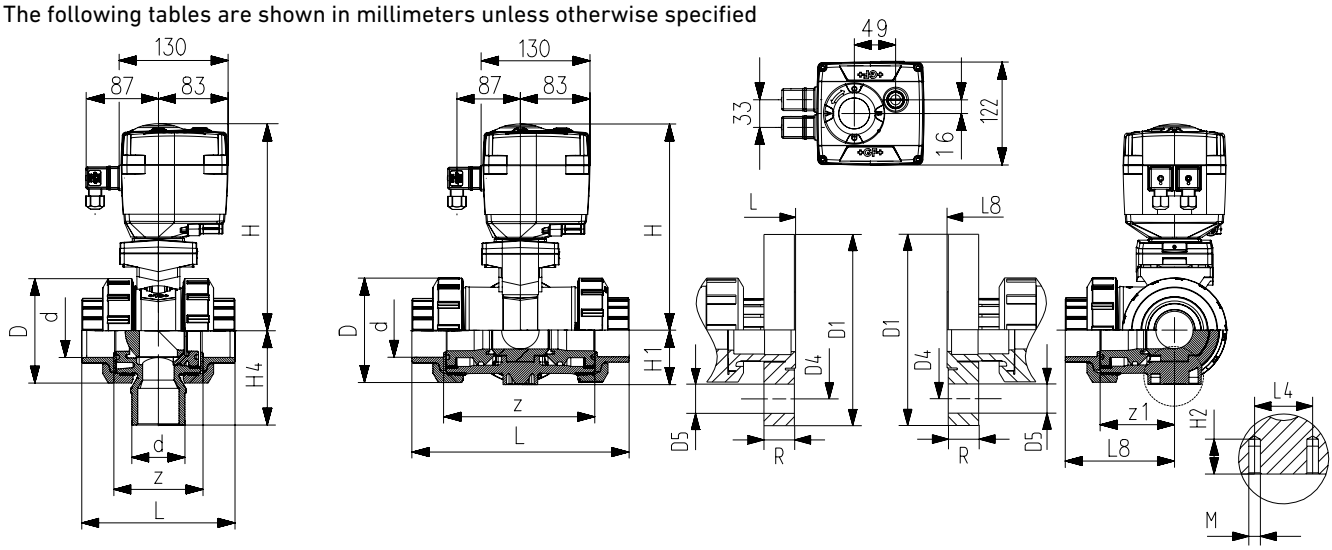

Type 125/128: All Configurations

Size (inch)	d (mm)	D	H	H1	H2	H3	H4	L4	M
⅜	16	50	201	28	8	28	62	25	M6
½	20	50	201	28	8	28	62	25	M6
¾	25	58	210	32	8	32	71	25	M6
1	32	68	210	36	8	36	77	25	M6
1¼	40	84	221	45	9	45	87	45	M8
1½	50	97	221	51	9	51	97	45	M8
2	63	124	243	65	9	65	112	45	M8

Type 128: PVC

	IPS Socket		Threaded NPT		ANSI Flanged				
Size (inch)	L	z	L	z	L	D1 (inch)	D4 (inch)	D5 (inch)	R (inch)
⅜	106	67	98	70	-	-	-	-	-
½	105	61	98	64	149	3.5	2.38	0.63	0.57
¾	121	70	112	76	165	3.88	2.75	0.63	0.58
1	133	76	127	83	184	4.25	3.13	0.63	0.66
1¼	152	90	146	99	206	4.63	3.5	0.63	0.69
1½	165	94	157	111	221	5	3.88	0.63	0.76
2	183	107	183	135	251	6	4.75	0.63	0.82

Type 125: PVC/CPVC

	IPS Socket				Threaded NPT				ANSI Flanged					
Size	L	L8	z	z1	L	L8	z	z1	L	L1	D1 (inch)	D4 (inch)	D5 (inch)	R (inch)
⅜	123	61	85	42	115	57	87	43	-	-	-	-	-	-
½	122	61	77	38	114	57	81	40	161	80	3.5	2.38	0.50	0.57
¾	141	71	92	46	131	66	96	48	182	91	3.88	2.75	0.50	0.58
1	161	81	105	53	155	78	111	56	208	104	4.25	3.13	0.50	0.66
1¼	187	93	126	63	181	90	134	67	238	119	4.63	3.5	0.50	0.69
1½	213	107	143	72	205	103	159	80	265	133	5	3.88	0.50	0.76
2	261	130	185	92	261	130	213	106	323	161	6	4.75	0.63	0.82

Electric Actuator
EA15

General

- **Nominal Torque:** 10 Nm
- **Peak Torque:** 20 Nm
- **Base Mount:** F05
- **Actuator Housing**: Glass-filled PP
- **DIN Plug Connection:** Cable gland
- **Manual Override**: Integrated
- **Position Indicator**: LED, optical, integrated
- **Position Feedback**: Open, close
- **Heater**: 10 position adjustable
- **Protection Class:** IP67

Actuator Certifications/Compliance

- Machinery Directive 2006/42/EC, Annex II B
- EMV Directive CE 2004/108/CE
- EMV VDE 0843 Section 20
- Low Voltage Directive CE 2006/95/CE
- Vibration Testing EN 60068-2-6
- Actuators for Industrial Valves EN 15714-2

Sample Specification

The EA15 shall be partial a turn electric actuator utilized in open/close applications. The actuator housing shall be of glass-filled PP material construction. An emergency manual override shall be integrated. The actuator base mount shall comply with ISO 5211. Position detection components shall be of solid state design with two programmable end stops available and each end stop shall utilize a bistable relay for position feedback. End stops shall be adjustable via a series of push buttons. An internal adjustable heater shall be integrated and utilize a temperature sensor within the actuator housing. A 7 segment display shall communicate fault status. Optical position indication shall be integrated and reinforced with a color specific LED. All actuators shall be manufactured under ISO9001 for Quality and ISO14001 for Environmental Management.

Optional Features

- **Fail Safe Return**: Battery back-up, internal or external
- **Manual Loading Station**: Local control box

Actuator Technical Data

	EA 15
Nominal Torque	10 Nm
Peak Torque	20 Nm
Rated Voltage	100- 230VAC, 50/60 Hz 24VAC/DC, 50/60Hz
Cycle Time	5s/90°
Rated Cycles at 70°F	150,000
Weight	4.0 lb
Actuating Angle	Standard set at 90°, max. 355°
Housing Material	Glass-filled PP
Position Feedback	Bi-stable, 250V, 2A
Emergency Manual Override	Integrated
Fuse	SMD fuse 2A, not replaceable
Rated Voltage Tolerance	+/- 15%
Rated Output	35VA @100-230VAC 24VAC/DC
Calculated Current Draw	0.3A @ 100VAC 0.13A @ 230VAC 1.7A @ 24VAC/DC
Duty Cycle	40%
Base Mount	F05
Protection Class	IP 67 per EN 60529 UL/CSA: For interior use Nema 4X
Impact Class	IK06 according to IEC62262
Overload Protection	Resetting, current-time dependant (1)
Overvoltage	Category II according to DIN EN 61010-1
Power Connection	Connector plug 3 P+ E per DIN EN 175301-03
Pollution Grade	Grade 2 according to DIN EN 61010-1
Maximum Elevation	6561 feet
Temperature	14° to 122°F ambient (2)
Allowable Humidity	90% relative humidity, non condensing

(1) Overload protection of the motor is dimensioned so that the motor and the power supply board are protected. As soon as the load is within the torque range, the actuator will begin operating again.
(2) At temperatures below 14°F and if there is condensation, the heating element should be activated.

Wiring

Control

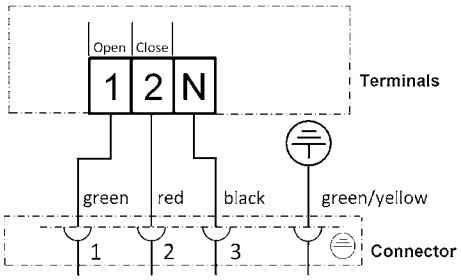

Feedback

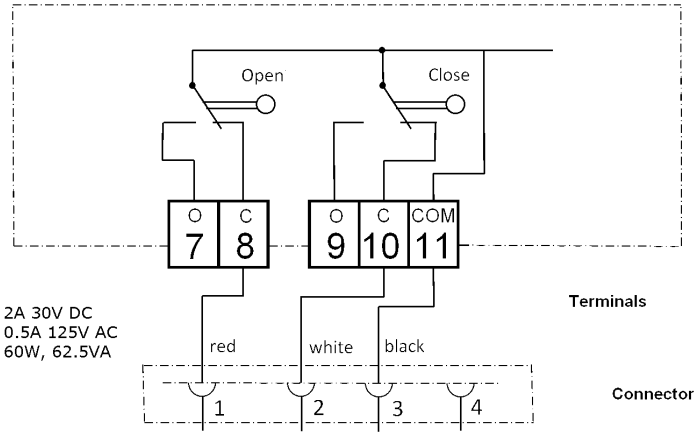

Dimensions

The following dimensions are shown in millimeters unless otherwise specified

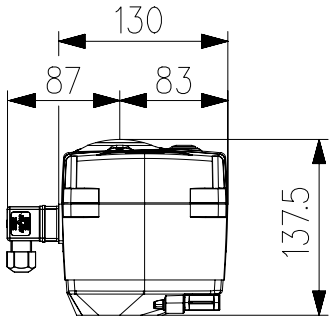

EA 15 Right

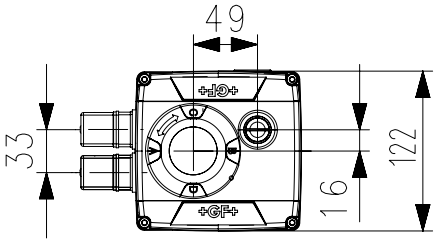

EA 15 Top

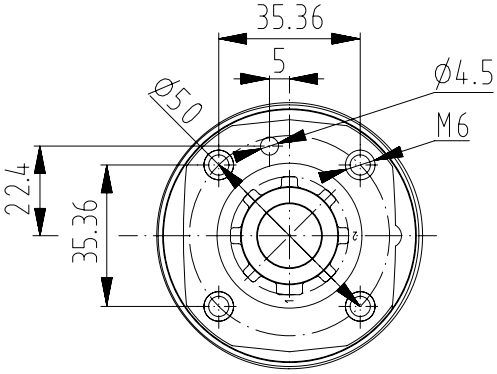

EA 15 Base Mount

Electrically Actuated Ball Valve
Type 104

General

- **Size**: ½"–2"
- **Material:** PVC, CPVC, ABS
- **Seat**: PTFE
- **Seals**: EPDM or FPM
- **End Connection**: Solvent cement socket, threaded
- **Actuator Housing**: Glass-filled PP
- **Voltage**: 110 VAC, 220 VAC, 24 VDC
- **Duty cycle:** 75%
- **Limit Switches**: Two SPST 5A

Optional Features

- **Voltage**: 12VAC, 12VDC, or 24VAC
- **End Connection**: Flanged

Key Certifications

- **NSF 61:** PVC and CPVC

Sample Specification

The Type 104 Ball Valve shall be true union and utilize a floating ball design. The actuator shall be single voltage with a manual override. Two position switches for feedback shall be standard. The ball shall be fully molded and full port with two way blocking capability. The stem shall be blowout proof, utilizing a double o-ring seal and a predetermined break point opposite the media side of the stem seals. The seat carrier shall be adjustable and reverse threaded. The handle shall double as a seat carrier adjustment or removal tool. The valve nut threads shall be of buttress type. Ball seats shall have an elastomeric backing o-ring and all elastomeric seals shall be of like material. ANSI flanged versions shall meet ANSI B16.5 150lb standards. All valves shall be tested in accordance to ISO9393 and designed to ISO16135 standards. All valves shall be manufactured under ISO9001 for Quality and ISO14001 for Environmental Management. Following assembly, every valve shall be tested and certified bubble tight exceeding Class VI standards.

Actuator Technical Data

EA 04	110 VAC	220 VAC	24 V DC
Nominal Torque	14.8 ft-lb		
Peak Torque	18.4 ft-lb		
Control Time	7 seconds/90° ±10% without load		
Actuating Angle	90° – 270°		
L/W/H (Actuator Only)	7.0"/4.1"/5.2"		
Housing Materials	Polyamide		
Position Indicator	Optical, integrated		
Emergency Manual Override	Integrated, standard		
Rated Voltage +5%	110 VAC, 50/60 Hz	220 VAC, 50/60 Hz	24 VDC, 50/60 Hz
Consumption at Peak Torque	0.15 A - 33 W, +/- 5%	0.15 A - 33 W, +/- 5%	0.55 A - 13.2 W, +/- 5%
Duty Cycle	75% at 77°F/15 min		
Protection Class	IP 65		
Power Connector Plug	3 P+ E per DIN EN 175301-03		
Limit switch Connector Plug	DIN 3337 (mini DIN)		
Weight	3.8 Pounds		
Limit Switches	2 SPDT Micro, 5A 250V		
Ambient Temperature	-4° – 158°F		

Important Note: Some residual voltage may be present on the closed terminal when the valve is in the open state and on the open terminal when in the closed state. For position indication the auxiliary limit switches should be used. The power terminals should not be used for position indication.

Wiring Diagrams

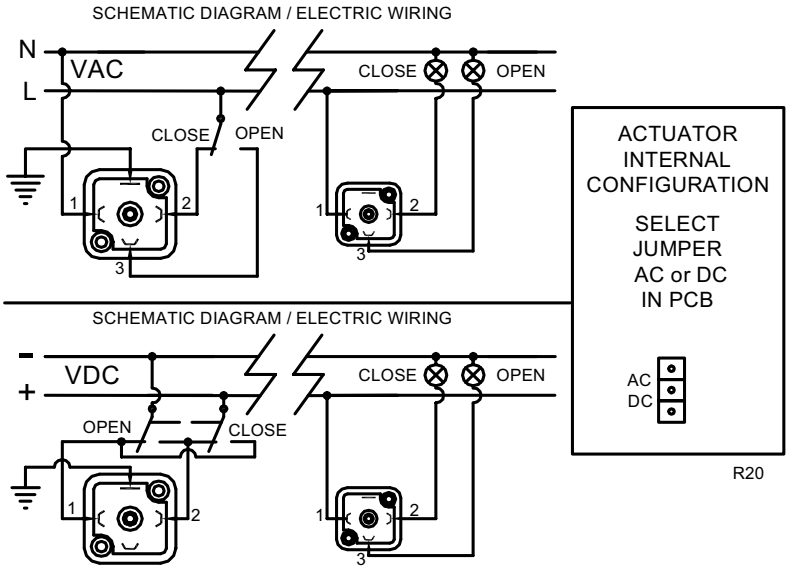

Converting from AC to DC Power

The Type 104 features a jumper connection on the main board that allows an operator to change the accepted incoming voltage from AC to DC power or vice versa. The 24V actuators come with the jumper set to DC in standard assemblies

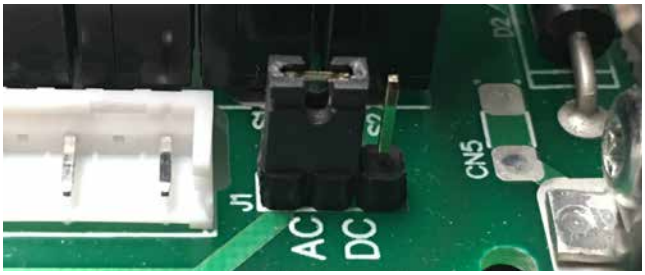

Technical Data

Pressure Temperature Curves

The following graphs are based on a 25 year lifetime water or similar media application

PVC

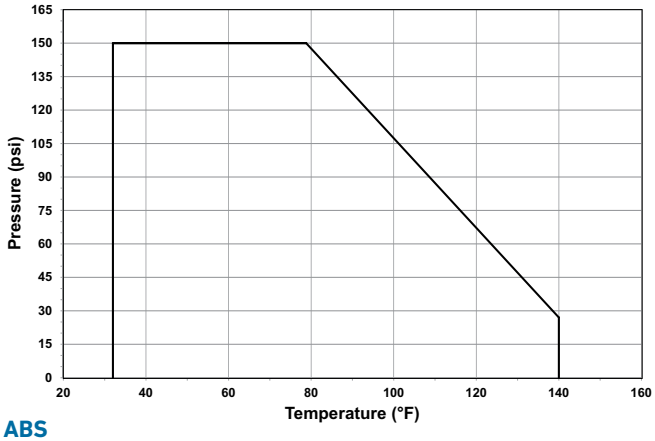

CPVC

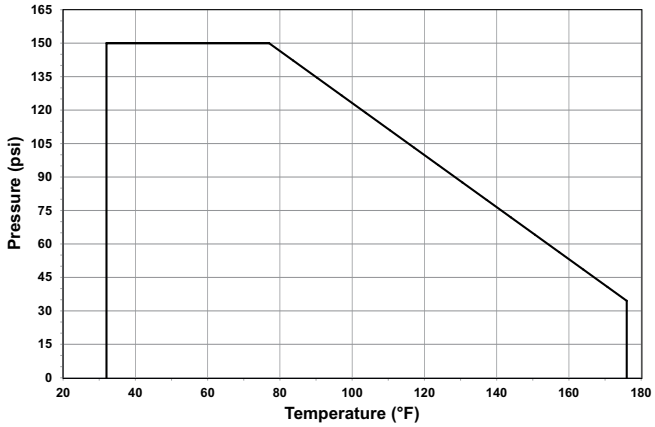

ABS

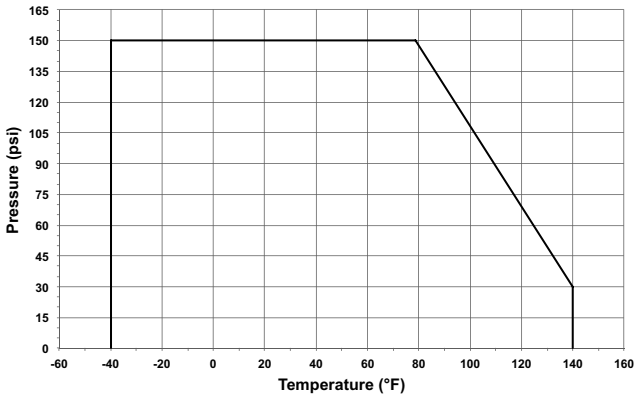

Flow

The following information is based on water applications at 68° F

Cv Value

Size (inch)	d (mm)	Cv (gal/min)
½	20	12.9
¾	25	24.5
1	32	49.0
1¼	40	70.0
1½	50	112.0
2	63	217.1

Dimensions

The following tables are shown in millimeters unless otherwise specified

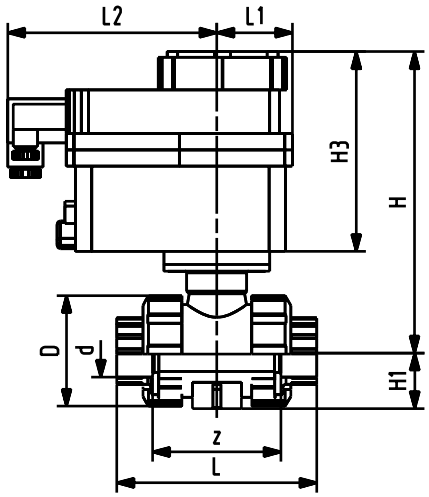

Socket/threaded

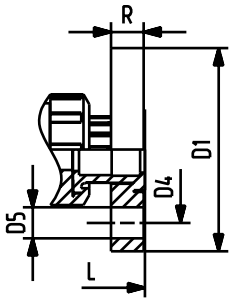

Flanged

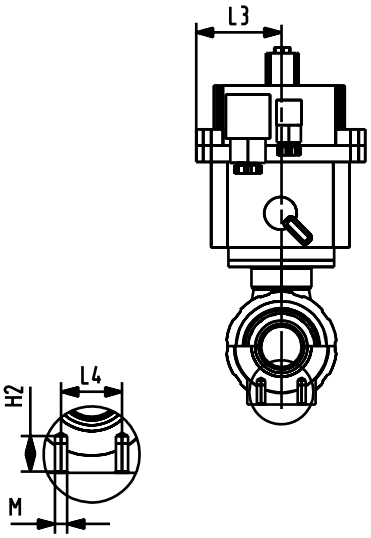

All Materials

All Materials

Size (inch)	D	H	H1	H2	H3	L1	L2	L3	L4	M
½	50	168	27	12	145	48	132	56	25	M6
¾	58	173	30	12	145	48	132	56	25	M6
1	68	173	36	12	145	48	132	56	25	M6
1¼	84	177	44	15	145	48	132	56	45	M8
1½	97	178	51	15	145	48	132	56	45	M8
2	124	184	64	15	145	48	132	56	45	M8

PVC/CPVC

Size	IPS Socket		Threaded NPT		ANSI Flanged				
(inch)	L	z	L	z	L	D1 (inch)	D4 (inch)	D5 (inch)	R (inch)
½	105	61	98	65	149	3.5	2.38	0.5	0.57
¾	121	70	111	74	165	3.88	2.75	0.5	0.58
1	133	76	127	82	184	4.25	3.13	0.5	0.66
1¼	154	90	147	98	206	4.63	3.5	0.5	0.69
1½	164	94	157	110	221	5	3.88	0.5	0.76
2	183	107	183	135	251	6	4.75	0.63	0.82

ABS

	Metric Socket	
d (mm)	L	z
20	95	64
25	110	72
32	123	79
40	141	94
50	157	95
63	183	107

Electrically Actuated Ball Valve

Type 179-184

General

- **Size**: ⅜"–4"
- **Material**: PVC, CPVC, PROGEF® Standard PP, ABS, SYGEF® Standard PVDF
- **Seat**: PTFE
- **Seals**: EPDM, FPM
- **End Connection**: Solvent cement socket, threaded, flanged, fusion spigot, fusion socket
- **Actuator Housing**: Glass-filled PP
- **Voltage**: 100-230VAC, 24VAC/DC
- **Mounting**: Stainless steel threaded inserts
- **Manual Override**: Integrated
- **End Stops**: Open, close, programmable middle position
- **Position Indicator**: LED, optical, integrated
- **Position Feedback**: Open, close, middle
- **Heater**: 10 position adjustable

Sample Specification

The Type 179-184 Ball Valve shall be used in either open/close or modulating applications. The actuator shall be either a Type EA25, EA45 or EA120 depending on valve size. The ball valve shall be true union and utilize a floating ball design. The ball shall be fully molded and full port with two way blocking capability. The stem shall be blowout proof, utilizing a double o-ring seal and a predetermined break point opposite the media side of the stem seals. The seat carrier shall be adjustable and reverse threaded. The valve nut threads shall be of buttress type. Ball seats shall have an elastomeric backing o-ring and all elastomeric seals shall be of like material. ANSI flanged versions shall meet ANSI B16.5 150lb standards. All valves shall be tested in accordance to ISO9393 and designed to ISO16136 standards. All valves shall be manufactured under ISO9001 for Quality and ISO14001 for Environmental Management. Following manual assembly, every valve shall be tested and certified bubble tight exceeding Class VI standards. Following actuated assembly, every valve shall be tested to confirm functionality.

Material Specification

PVC valves shall meet ASTM D1784 cell classification 12454 standards. CPVC valves shall meet ASTM D1784 cell classification 23447-B standards. PP valves shall meet ASTM D5847-14 cell classification PP0510B66851 standards. ABS valves shall meet ASTM D3965 cell classification 42222 standards. PVDF valves shall be type 1, grade 2 according to ASTM D3222 standards. Valves of all materials shall be RoHS compliant.

Definition of Valve Type

- **Type 179:** PVC/CPVC/ABS body, metric connection
- **Type 180:** PP body, all connections
- **Type 181:** PVDF body, all connections
- **Type 182:** PVC/CPVC body, ASTM connection
- **Type 183:** PVC/CPVC body, BS connection
- **Type 184** PVC/CPVC body, JIS connection

Components

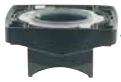

Optional Features

- **Positioner**: Current, voltage
- **Network**: Profibus DP
- **Fail Safe Return**: Battery back up, externally powered board
- **Smart Module**: Cycle monitoring, cycle counter, cycle extension, motor current monitoring
- **Manual Loading Station**: Local control box
- **Seals**: Alternative materials available upon request
- **Seat**: PVDF
- **End Connection**: Alternatives available upon request
- **Control Ball**: For throttling applications available ⅜"-2"
- **Vented Ball**: For sodium hypochlorite use
- **Cleaned**: Silicone free/oil free

Key Valve Certifications

- **NSF 61**: PVC and CPVC
- **FDA CFR 21 177.1520**: PP and PVDF
- **FDA CFR 21 177.2600**: EPDM and FPM
- **FDA CFR 21 177.1550**: PTFE
- **ABS**: All materials

Key Actuator Compliance

- **Machinery Directive 2006/42/EC, Annex II B**
- **EMV Directive CE 2004/108/CE**
- **EMV VDE 0843 Section 20**
- **Low Voltage Directive CE 2006/95/CE**
- **Vibration Testing EN 60068-2-6**
- **Interface ISO 5211**
- **Actuators for Inustrial Valves EN 15714-2**

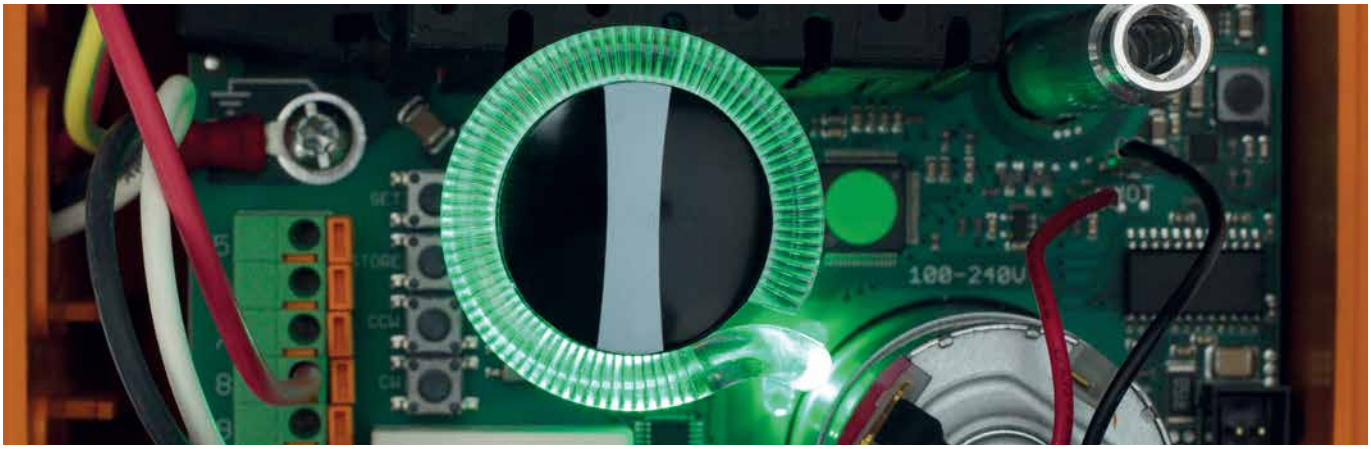

Actuator Technical Data

	EA 25	EA 45	EA 120
Valve Size	⅜"-2"	2½"	3" - 4"
Cycle Time	5s/90°	6s/90°	15s/90°
Rated Cycles at 70°F	250,000	100,000	100,000
Actuating Angle	Standard set at 90°, max. 355°		
Housing Material	Glass-filled PP		
Position Feedback	230V, 6 Amp		
Emergency Manual Override	Integrated		
Rated Voltage	100- 230V, 50/60 Hz 24V, AC/DC, 50/60Hz		
Rated Voltage Tolerance	+/- 15%		
Rated Output	35VA @ 100-230VAC 40VA @ 24VAC/DC	55VA @ 100-230VAC 60VA @ 24VAC/DC	50VA @ 100-230VAC 55VA @ 24VAC/DC
Calculated Current Draw	0.35A @ 100VAC 0.15A @ 230VAC 1.7A @ 24VDC	0.55A @ 100VAC 0.24A @ 230VAC 2.5A @ 24VDC	0.5A @ 100VAC 0.22A @ 230VAC 2.3A @ 24VDC
Duty Cycle	100%	50%	50%
Protection Class	IP 67 per EN 60529 UL/CSA: For interior use Nema 4X		
Overload Protection	Resetting, current-time dependant (1)		
Overvoltage Category	Category II according to DIN EN 61010-1		
Power Connection	Connector plug 3 P+ E per DIN EN 175301-03		
Pollution Grade	Grade 2 according to DIN EN 61010-1		
Maximum Elevation	6561 feet		
Ambient Temperature	14° to 122°F (2)		
Allowable Humidity	90% relative humidity, non condensing		

(1) Overload protection of the motor is dimensioned so that the motor and the power supply board are protected. As soon as the load is within the torque range, the actuator will begin operating again.
(2) At temperatures below 14°F and if there is condensation, the heating element should be activated.

Technical Data

Flow

The following information is based on water applications at 68° F

Cv Value

Size (inch)	d (mm)	Cv (gal/min)
⅜	16	4.9
½	20	12.9
¾	25	24.5
1	32	49.0
1¼	40	70.0
1½	50	112.0
2	63	217.1
2½	75	350.0
3	90	490.0
4	110	770.0

Flow Characteristics

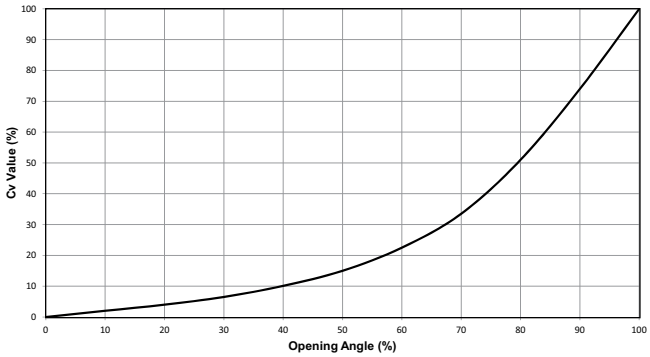

Technical Data

Pressure Temperature Curves

The following graphs are based on a 25 year lifetime water or similar media application

PVC

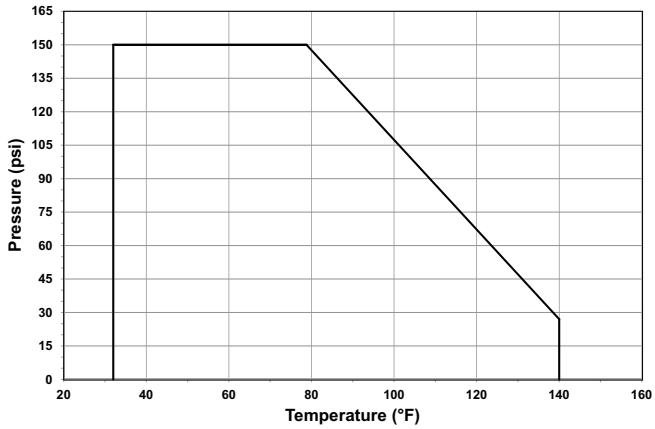

CPVC

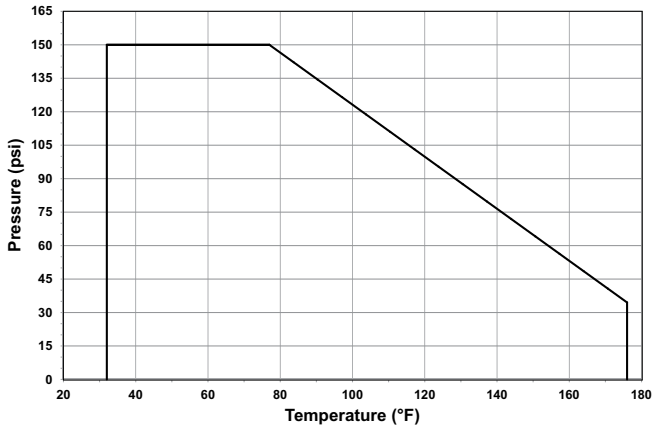

PP

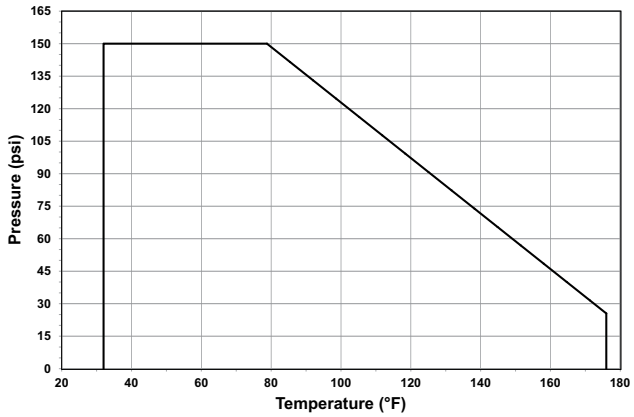

ABS

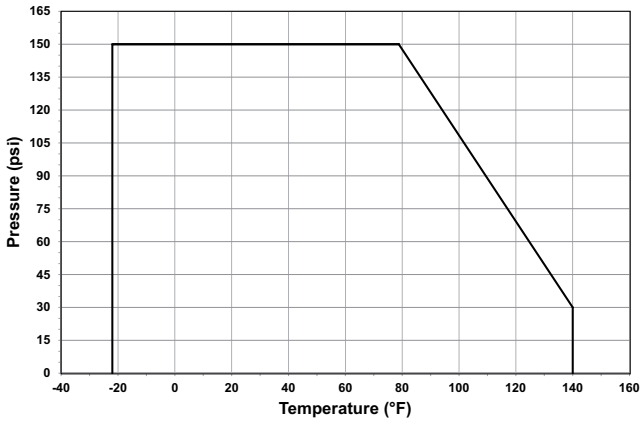

PVDF

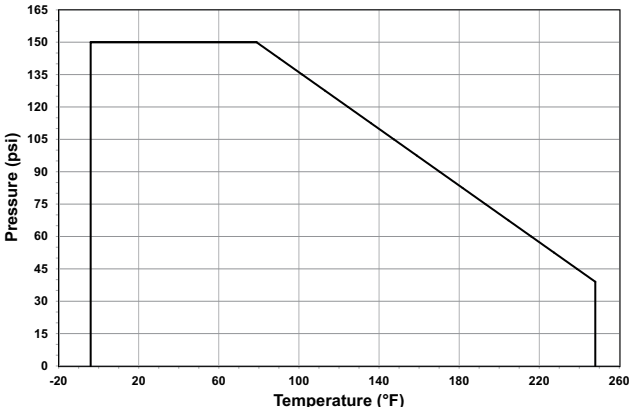

Pressure-Temperature

Material	Temperature Range (°F)	Max Pressure (psi)
PVC	32 to 140	150
CPVC	32 to 176	150
PP	32 to 176	150
ABS	-40 to 140	150
PVDF	-4 to 284	150

Vacuum Service

The Type 179-184 is rated for full vacuum service. Maximum differential pressure of 15psi at 122°F.

Dimensions

The following tables are shown in millimeters unless otherwise specified

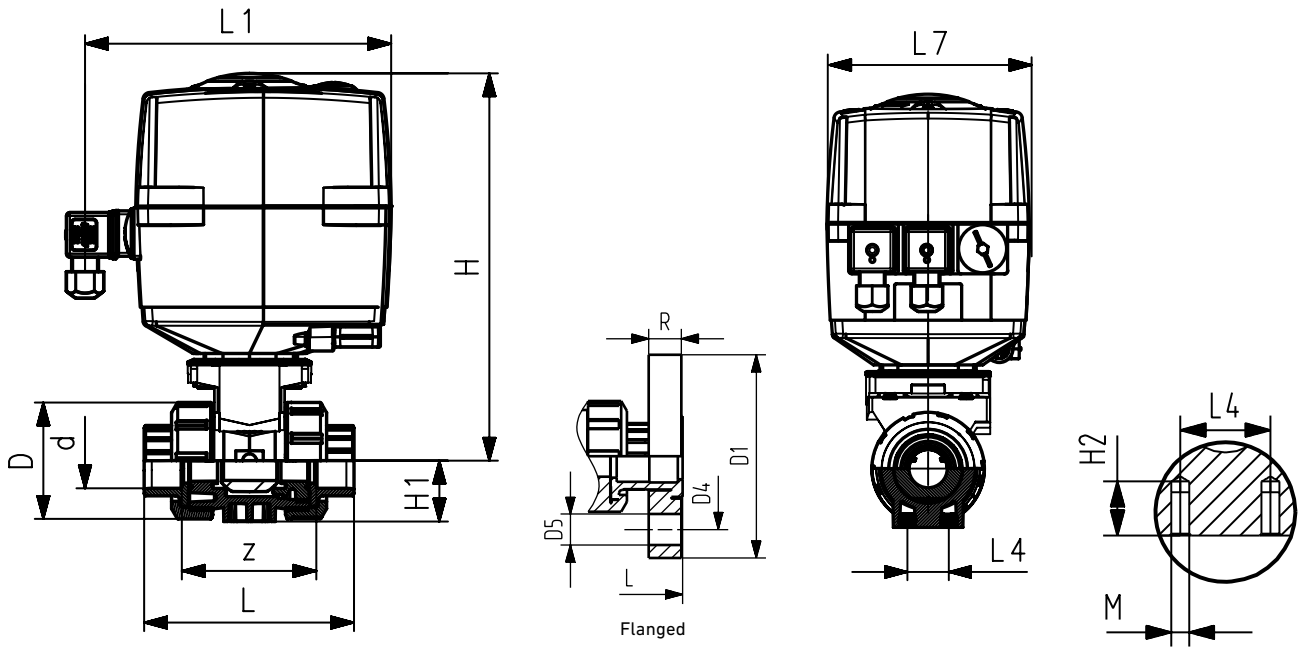

All Materials

Size (inch)	d (mm)	D	H	H1	H2	L1	L4	L7	M
⅜	16	50	231	27	12	180	25	122	M6
½	20	50	231	27	12	180	25	122	M6
¾	25	58	240	30	12	180	25	122	M6
1	32	68	240	36	12	180	25	122	M6
1¼	40	84	251	44	15	180	45	122	M8
1½	50	97	251	51	15	180	45	122	M8
2	63	124	273	64	15	180	45	122	M8
2½	75	166	346	85	15	180	70	122	M8
3	90	200	358	105	15	180	70	122	M8
4	110	238	365	123	22	180	120	122	M12

PVC/CPVC

Size	IPS Socket		Threaded NPT		ANSI Flanged				
(inch)	L	z	L	z	L	D1 (inch)	D4 (inch)	D5 (inch)	R (inch)
⅜	105	67	98	69	-	-	-	-	-
½	105	61	98	65	149	3.5	2.38	0.63	0.57
¾	121	70	111	74	165	3.88	2.75	0.63	0.58
1	133	76	127	82	184	4.25	3.13	0.63	0.66
1¼	154	90	147	98	206	4.63	3.5	0.63	0.69
1½	164	94	157	110	221	5	3.88	0.63	0.76
2	183	107	183	135	251	6	4.75	0.63	0.82
2½	233	144	234	166	311	7	5.5	0.63	0.98
3	254	151	255	175	343	7.5	6	0.63	1.02
4	301	174	302	214	397	9	7.5	0.63	1.11

The following tables are shown in millimeters unless otherwise specified

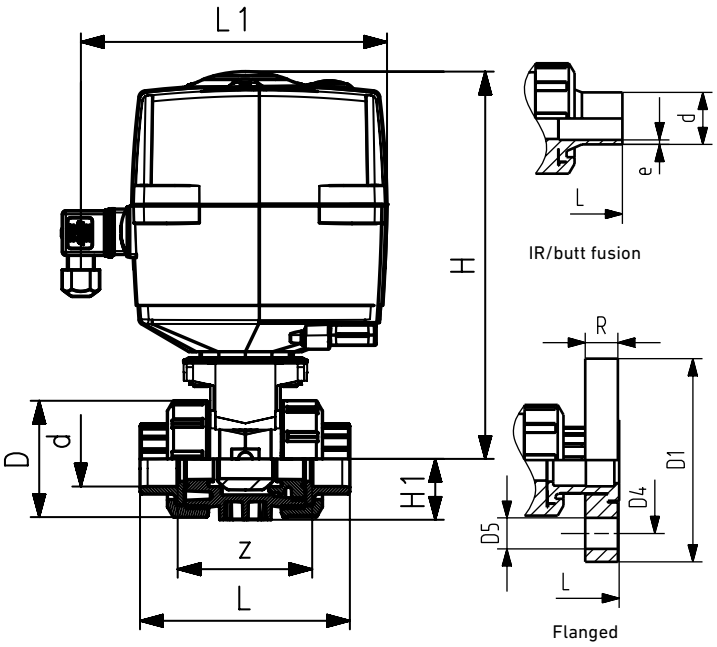

ABS

d (mm)	Metric Socket	
	L	z
16	92	64
20	95	64
25	110	72
32	123	79
40	146	94
50	157	95
63	183	107
75	233	144
90	254	151
110	301	174

PP

d (mm)	Metric Socket		Metric IR/Butt		Threaded NPT		ANSI Flanged				
	L	z	L	e	L	z	L	D1 (inch)	D4 (inch)	D5 (inch)	R (inch)
16	93	67	-	-	96	71	-	-	-	-	-
20	95	66	130	1.9	99	64	166	3.74	2.36	0.63	0.63
25	109	77	143	2.3	111	76	177	4.13	2.76	0.63	0.67
32	119	83	150	2.9	127	83	191	4.53	3.11	0.63	0.71
40	135	99	171	3.7	146	100	209	5.51	3.5	0.63	0.79
50	147	105	191	4.6	157	111	229	5.91	3.86	0.63	0.87
63	168	117	220	5.8	183	134	253	6.5	4.76	0.63	0.94
75	233	167	266	6.8	-	-	416	7.28	5.51	0.75	1.02
90	254	180	264	8.2	-	-	414	7.87	5.98	0.75	1.06
110	301	215	301	10.0	-	-	451	9.02	7.48	0.75	1.1

PVDF

d (mm)	Metric Socket		Metric IR/Butt		Threaded NPT		ANSI Flanged				
	L	z	L	e	L	z	L	D1 (inch)	D4 (inch)	D5 (inch)	R (inch)
16	93	67	-	-	96	69	-	-	-	-	-
20	95	66	130	1.9	99	64	174	3.74	2.36	0.63	0.63
25	109	77	143	1.9	111	76	189	4.13	2.76	0.63	0.67
32	119	83	150	2.4	127	83	199	4.53	3.11	0.63	0.71
40	135	99	171	2.4	146	101	235	5.51	3.5	0.63	0.79
50	147	105	191	3.0	157	111	243	5.91	3.86	0.63	0.87
63	168	117	220	3.0	183	135	261	6.5	4.76	0.63	0.94
75	233	167	266	3.6	-	-	426	7.28	5.51	0.75	1.02
90	254	180	264	4.3	-	-	426	7.87	5.98	0.75	1.06
110	301	215	301	5.3	-	-	487	9.02	7.48	0.75	1.1

Electrically Actuated 3-way Ball Valves

Type 167-170

General

- **Size**: ⅜"–2"
- **Material**: PVC, CPVC, PROGEF® Standard PP, ABS, SYGEF® Standard PVDF
- **Seat**: PTFE
- **Seals**: EPDM, FPM
- **End Connection**: Solvent cement socket, threaded, flanged, fusion spigot, fusion socket
- **Actuator Housing**: Glass-filled PP
- **Voltage**: 100-230VAC, 24VDC
- **Manual Override**: Integrated
- **Position Indicator**: Optical, integrated

Key Valve Certifications

- **FDA CFR 21 177.1520**: PP and PVDF
- **FDA CFR 21 177.2600**: EPDM and FPM
- **FDA CFR 21 177.1550**: PTFE
- **USP 25 Class VI (physiological non-toxic)**: PP and PVDF

Sample Specification

The Type 167-170 3-way Ball Valve shall be used in either open/close or modulating applications. The actuator shall be a Type EA25. The ball valve shall be true union and utilize a floating ball design. The ball shall be fully molded and full port with two way blocking capability. The stem shall be blowout proof, utilizing a double o-ring seal and a predetermined break point opposite the media side of the stem seals. The seat carrier shall be adjustable and reverse threaded. The valve nut threads shall be of buttress type. Ball seats shall have an elastomeric backing o-ring and all elastomeric seals shall be of like material. ANSI flanged versions shall meet ANSI B16.5 150lb standards. All valves shall be tested in accordance to ISO9393 and designed to ISO16135 standards. All valves shall be manufactured under ISO9001 for Quality and ISO14001 for Environmental Management. Following manual assembly, every valve shall be tested and certified bubble tight exceeding Class VI standards. Following actuated assembly, every valve shall be tested to confirm functionality.

Material Specification

PVC valves shall meet ASTM D1784 cell classification 12454 standards. CPVC valves shall meet ASTM D1784 cell classification 23447-B standards. PP valves shall meet ASTM D5847-14 cell classification PP0510B66851 standards. ABS valves shall meet ASTM D3965 cell classification 42222 standards. PVDF valves shall be type 1, grade 2 according to ASTM D3222 standards. Valves of all materials shall be RoHS compliant.

Key Actuator Certifications

- Machinery Directive 2006/42/EC, Annex II B
- EMV Directive CE 2004/108/CE
- EMV VDE 0843 Section 20
- Low Voltage Directive CE 2006/95/CE
- Vibration Testing EN 60068-2-6
- Interface ISO 5211
- Actuators for Industrial Valves EN 15714-2

Definition of Valve Style

Horizontal

Vertical

Actuator Technical Data

	EA 25
Valve Size	⅜"-2"
Cycle Time	5s/90°
Actuating Angle	Standard set at 90°, max. 355°
Housing Material	Glass-filled PP
Position Feedback	230V, 6 Amp
Rated Voltage	100- 230V, 50/60 Hz 24V, AC/DC, 50/60Hz
Rated Voltage Tolerance	+/- 15%
Rated Output	35VA @ 100-230VAC 40VA @ 24VAC/DC
Duty Cycle	100%
Protection Class	IP 67 per EN 60529 UL/CSA: For interior use Nema 4X
Overload Protection	Resetting, current-time dependant (1)
Power Connection	Connector plug 3 P+ E per DIN EN 175301-03
Ambient Temperature	14° to 122°F (2)
Allowable Humidity	90% relative humidity, non condensing

(1) Overload protection of the motor is dimensioned so that the motor and the power supply board are protected. As soon as the load is within the torque range, the actuator will begin operating again.
(2) At temperatures below 14°F and if there is condensation, the heating element should be activated.

Optional Features

- **Positioner**: Current, voltage
- **Network**: Profibus DP
- **Fail Safe Return**: Battery back up, externally powered board
- **Smart Module**: Cycle monitoring, cycle counter, cycle extension, motor current monitoring
- **Manual Loading Station**: Local control box
- **Seals**: Alternative materials available upon request
- **Seat**: PVDF
- **End Connection**: Alternatives available upon request
- **Cleaned**: Silicone free/oil free

Material Availability

Material	Horizontal	Vertical
PVC	All Sizes	All Sizes
CPVC	All Sizes	-
PP	All Sizes	-
ABS	All Sizes	All Sizes
PVDF	All Sizes	-

Definition of Valve Type

- **Type 167:** PVC/CPVC/ABS horizontal
- **Type 168:** PP horizontal
- **Type 169:** PVDF horizontal
- **Type 170:** PVC/ABS vertical

Components

Wiring Diagrams

Control

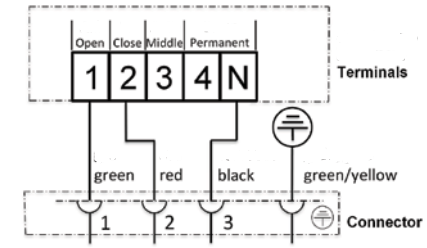

Feedback

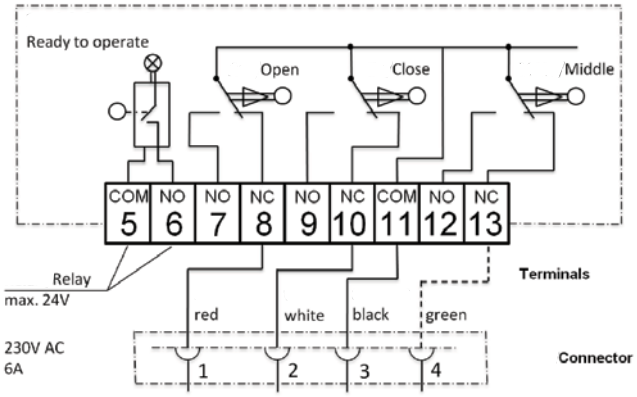

Pressure Temperature Curves

The following graphs are based on a 25 year lifetime water or similar media application

PVC

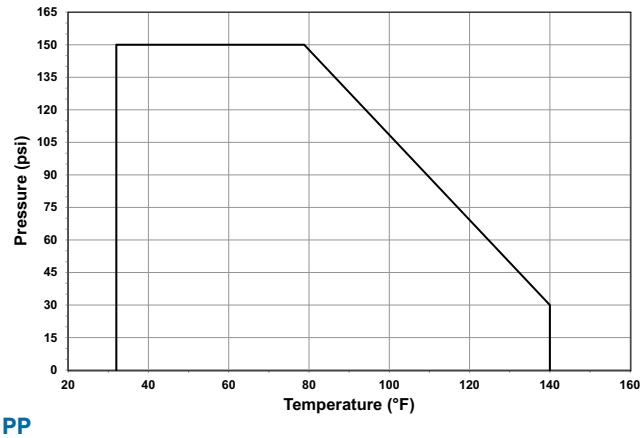

CPVC

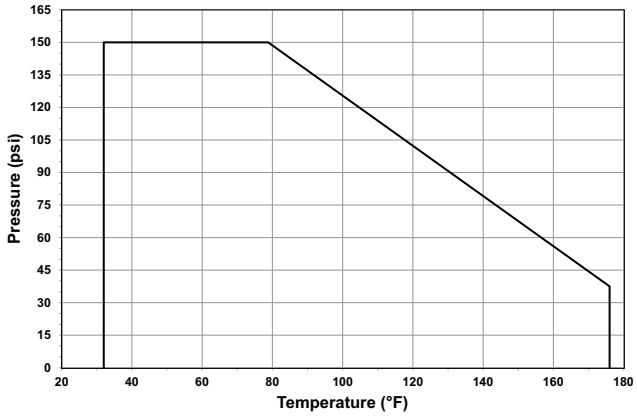

PP

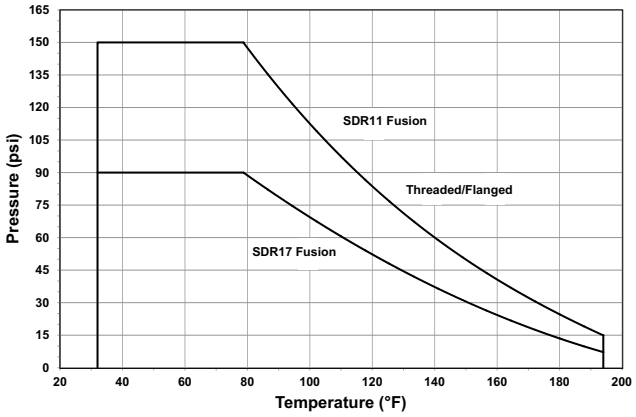

ABS

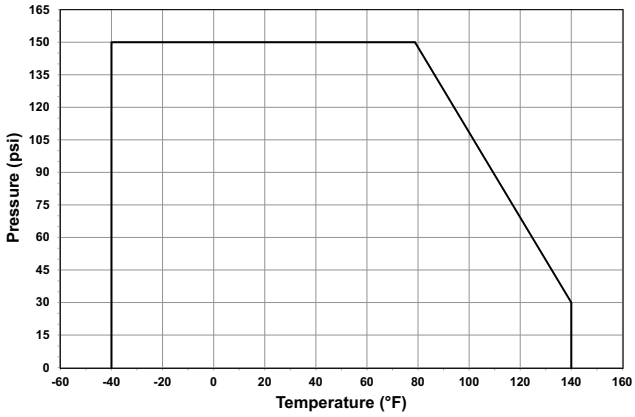

PVDF

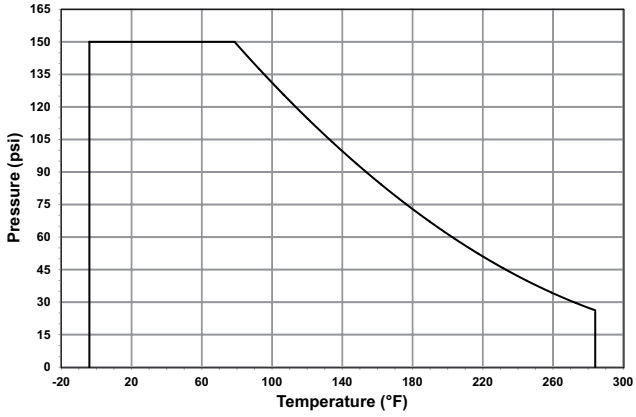

Pressure-Temperature

Material	Temperature Range (°F)	Max Pressure (psi)
PVC	32 to 140	150
CPVC	32 to 176	150
PP	32 to 176	150
ABS	-40 to 140	150
PVDF	-4 to 284	150

Vacuum Service

The Type 167-170 is rated for full vacuum service. Maximum differential pressure of 15psi at 122°F.

Flow

Porting options shown turning the valve rotating clockwise. Redundant and intermediate positions not shown.

Vertical Diverter

0°

90°

Vertical: Cv Value (gal/min)

Size (inch)	d (mm)	A-C or B-C
⅜	16	3.5
½	20	5.3
¾	25	10.5
1	32	19.6
1¼	40	33.6
1½	50	43.4
2	63	86.1

Vertical L-port

0°

90°

180°

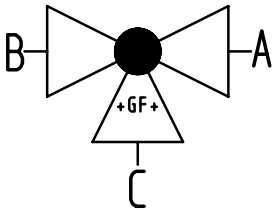

Horizontal L-port

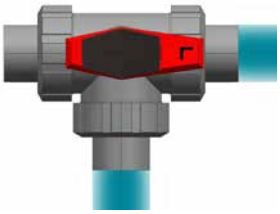

0°

90°

Horizontal L-port: Cv Value (gal/min)

Size (inch)	d (mm)	A-B	C-B or C-A	B-C or A-C
⅜	16	0.7	3.5	3.5
½	20	1.1	4.5	4.5
¾	25	2.1	10.5	10.5
1	32	3.5	19.6	19.6
1¼	40	6.3	33.6	33.6
1½	50	7.7	43.4	43.4
2	63	15.4	86.1	86.1

Horizontal T-port

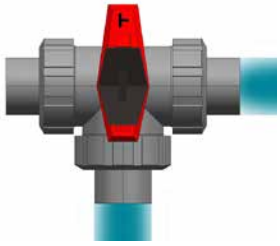

0°

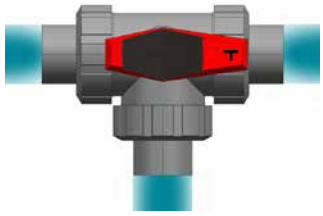

90°

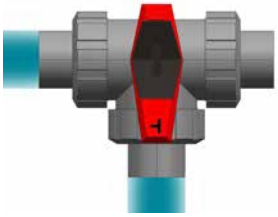

Horizontal T-port: Cv Value (gal/min)

Size (inch)	d (mm)	A-B	C-B or C-A	B-C or A-C
⅜	16	9.8	2.5	2.8
½	20	14	3.5	4.9
¾	25	32.9	9.1	10.5
1	32	55.5	14	17.5
1¼	40	90.3	26.6	32.9
1½	50	133.7	32.9	42
2	63	217	62.3	84.7

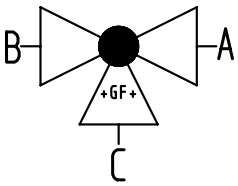

Key Design Feature: Middle Position

Type 167-170 Valves offer the ability to program a middle position standard. The middle position is any point between the open and close end positions and is specifically useful with 3-way valves because an operator can utilize three porting positions instead of two. The Type 167-170 also offers feedback for the middle position standard so an operator can also program the actuator to send a feedback signal at a desired point (ie nearly closed, nearly open, etc) even if that point is not being used as a control end position.

Dimensions

The following tables are shown in millimeters unless otherwise specified

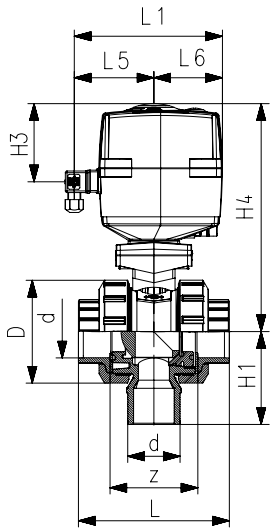

Socket/threaded

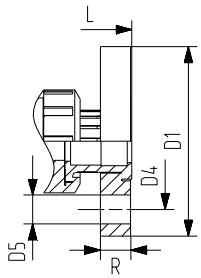

Flanged

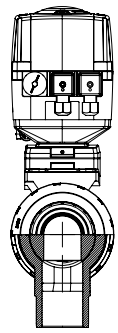
Socket/threaded

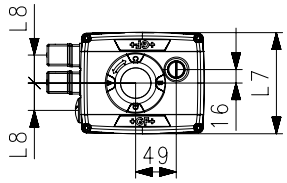

All configurations

Type 170: All Configurations

Size (inch)	d (mm)	D	H	H2	H1	H3	L1	L4	L5	L6	L7	L9	M
⅜	16	50	231	62	28	94	180	25	97	83	122	33	M6
½	20	50	231	62	28	94	180	25	97	83	122	33	M6
¾	25	58	240	71	32	94	180	25	97	83	122	33	M6
1	32	68	240	71	36	94	180	25	97	83	122	33	M6
1¼	40	84	251	84	45	94	180	45	97	83	122	33	M8
1½	50	97	251	84	51	94	180	45	97	83	122	33	M8
2	63	124	273	106	65	94	180	45	97	83	122	33	M8

Type 170: PVC

	IPS Socket		Threaded NPT	
Size (inch)	L	z	L	z
⅜	106	67	98	70
½	105	61	98	64
¾	121	70	112	76
1	133	76	127	83
1¼	152	90	146	99
1½	165	94	157	111
2	183	107	183	135

Type 170: ABS

	Metric Socket	
d (mm)	L	z
16	92	64
20	95	64
25	111	74
32	123	79
40	146	95
50	157	95
63	183	107

Type 170: PVC

	ANSI Flanged				
Size (inch)	L	D1 (inch)	D4 (inch)	D5 (inch)	R (inch)
½	149	3.5	2.38	0.57	0.57
¾	165	3.88	2.75	0.58	0.58
1	184	4.25	3.13	0.66	0.66
1¼	206	4.63	3.5	0.69	0.69
1½	221	5	3.88	0.76	0.76
2	251	6	4.75	0.82	0.82

Dimensions

The following tables are shown in millimeters unless otherwise specified

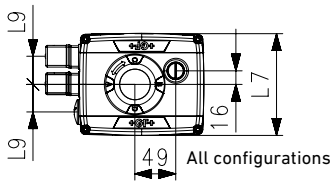

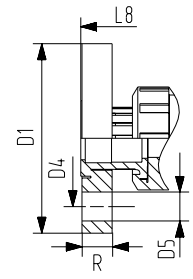

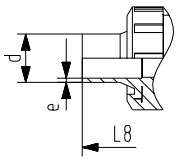

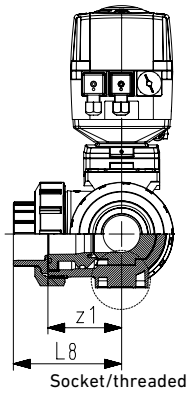

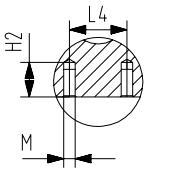

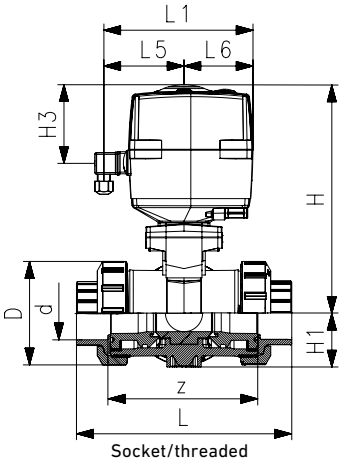

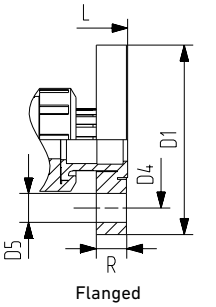

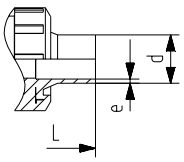

Type 167-169: All Configurations

Size (inch)	d (mm)	D	H	H2	H1	H3	L1	L4	L5	L6	L7	L9	M
⅜	16	50	231	62	28	94	180	25	97	83	122	33	M6
½	20	50	231	62	28	94	180	25	97	83	122	33	M6
¾	25	58	240	71	32	94	180	25	97	83	122	33	M6
1	32	68	240	71	36	94	180	25	97	83	122	33	M6
1¼	40	84	251	84	45	94	180	45	97	83	122	33	M8
1½	50	97	251	84	51	94	180	45	97	83	122	33	M8
2	63	124	273	106	65	94	180	45	97	83	122	33	M8

Type 167: ABS

d (mm)	Metric Socket			
	L	L8	z	z1
16	108	54	80	40
20	112	56	80	40
25	129	65	95	48
32	151	75	109	54
40	181	90	129	64
50	205	103	149	75
63	261	130	193	96

Type 167: PVC/CPVC

Size	IPS Socket				Threaded NPT				Flanged					
	L	L8	z	z1	L	L8	z	z1	L	L1	D1 (inch)	D4 (inch)	D5 (inch)	R (inch)
⅜	123	61	85	42	115	57	87	43	-	-	-	-	-	-
½	122	61	77	38	114	57	81	40	161	80	3.5	2.38	0.57	0.57
¾	141	71	92	46	131	66	96	48	182	91	3.88	2.75	0.58	0.58
1	161	81	105	53	155	78	111	56	208	104	4.25	3.13	0.66	0.66
1¼	187	93	126	63	181	90	134	67	238	119	4.63	3.5	0.69	0.69
1½	213	107	143	72	205	103	159	80	265	133	5	3.88	0.76	0.76
2	261	130	185	92	261	130	213	106	323	161	6	4.75	0.82	0.82

Type 168-169: PP/PVDF

d (mm)	Metric Socket				Metric IR/Butt				Threaded NPT			
	L	L8	z	z1	L	L8	e (PP)	e (PVDF)	L	L8	z	z1
16	110	55	82	41	-	-	-	-	112	56	86	43
20	112	56	82	41	146	73	1.9	1.9	114	57	80	40
25	129	65	97	49	163	82	2.3	1.9	131	66	95	48
32	146	73	110	55	178	89	2.9	2.4	154	77	110	55
40	170	85	132	66	204	102	3.7	2.4	180	90	132	66
50	193	98	151	76	237	120	4.6	3.0	203	103	157	79
63	244	123	188	94	296	149	5.8	3.0	258	130	210	105

Electrically Actuated Wafer Butterfly Valve

Type 145

General

- **Size**: 2"–12"
- **Outer Body**: Glass-filled PP
- **Material**: PVC, CPVC, PROGEF® Standard PP, ABS, SYGEF® Standard PVDF
- **Seals**: EPDM, FPM, PTFE/FPM
- **Stem**: 316 stainless steel
- **Voltage**: 100-230VAC, 24VAC/DC
- **Connection**: Both ANSI 150 and DIN 2501
- **Actuator Housing**: Glass-filled PP
- **Manual Override**: Integrated
- **End Stops**: Open, close, programmable middle position
- **Position Indicator**: LED, optical, integrated
- **Position Feedback**: Open, close, middle
- **Heater**: 10 position adjustable

Sample Specification

The Type 145 Electrically Actuated Butterfly Valve shall be wafer style compatible with both ANSI B16.5 150 lb and DIN 2501 flange patterns. The disk operation shall utilize double eccentric design principles. The shaft shall be non-wetted by a bushing assembly with double O-ring seals and fixed at both ends. The face seal shall be a Q-ring compatible with flat and serrated flange adapters. The face, disk and shaft seals shall operate independently. The wetted body and disk shall be of like materials. Valves shall be rated for bidirectional use. All valves shall be tested in accordance to ISO9393 and designed to ISO16136 standards. All valves shall be manufactured under ISO9001 for Quality and ISO14001 for Environmental Management. Following assembly, every valve shall be tested and certified bubble tight exceeding Class VI standards.

Material Specification

PVC valves shall meet ASTM D1784 cell classification 12454 standards. CPVC valves shall meet ASTM D1784 cell classification 23447-B standards. PP valves shall meet ASTM D5847-14 cell classification PP0510B66851 standards. ABS valves shall meet ASTM D3965 cell classification 42222 standards. PVDF valves shall be type 1, grade 2 according to ASTM D3222 standards. Valves of all materials shall be RoHS compliant.

Key Valve Certifications

- **NSF 61**: PVC and CPVC
- **FDA CFR 21 177.1520**: PP and PVDF
- **FDA CFR 21 177.2600**: EPDM and FPM
- **FDA CFR 21 177.1550**: PTFE
- **ABS**: All materials
- **USP Class VI (physiological non-toxic)**: EPDM, FPM, PTFE, PP and PVDF

Components

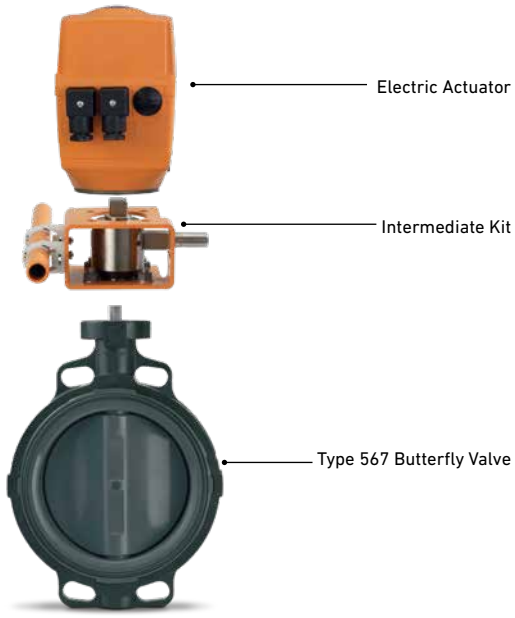

Heater Dial Selector

Dial Setting	Heater Turned On (°F)	Heater Turned Off (°F)
0 (default)	32	41
1	41	50
2	50	59
3	59	68
4	68	77
5	77	86
6	86	95
7	95	104
8	104	113
9	104	113

Optional Features

- **Positioner**: Current, voltage
- **Network**: Profibus DP
- **Fail Safe Return**: Battery back up, externally powered board
- **Smart Module**: Cycle monitoring, cycle counter, cycle time extension, motor current monitoring
- **Manual Loading Station**: Local control box
- **Stem Extension**: Two piece stainless steel
- **Shaft**: Titanium, Hastelloy-C
- **Hardware**: Alternatives available upon request
- **Cleaned**: Silicone free/oil free

Actuator Certifications/Compliance

- **Machinery Directive 2006/42/EC, Annex II B**
- **EMV Directive CE 2004/108/CE**
- **EMV VDE 0843 Section 20**
- **Low Voltage Directive CE 2006/95/CE**
- **Vibration Testing EN 60068-2-6**
- **Actuators for Industrial Valves EN 15714-2**

Key Design Feature

Heater

An adjustable heater is integrated into the Type 145 Valve to protect the actuator subcomponents in cold applications and to prevent water from condensing inside the actuator housing in humid environments. The heater will turn on when the actuator's internal temperature reaches a designated value and turn off after it has heated to a designated value. These parameters can be adjusted by rotating the arrow on the dial selector shown below.

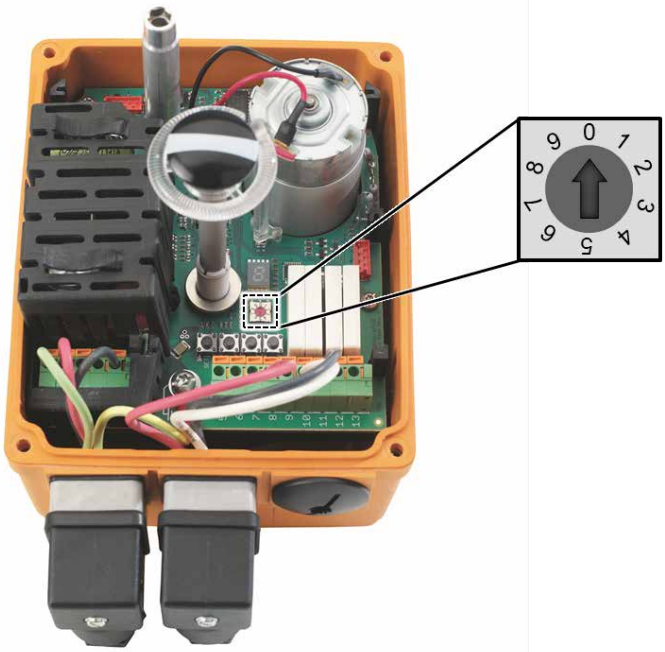

Actuator Technical Data

	EA 45	EA 120	EA 250
Valve Size	2"-2½"	3"-6"	8"-12"
Cycle Time	6s/90°	15s/90°	20s/90°
Rated Cycles at 70°F	100,000	100,000	75,000
Actuating Angle	Standard set at 90°, max. 355°		
Housing Material	Glass-filled PP		
Position Feedback	230V, 6 Amp		
Emergency Manual Override	Integrated		
Rated Voltage	100- 230V, 50/60 Hz 24V, AC/DC, 50/60Hz		
Rated Voltage Tolerance	+/- 15%		
Rated Output	55VA @ 100-230VAC 60VA @ 24VAC/DC	50VA @ 100-230VAC 55VA @ 24VAC/DC	60VA @ 100-230VAC 65VA @ 24VAC/DC
Duty Cycle	50%	50%	35%
Protection Class	IP 67 per EN 60529 UL/CSA: For interior use Nema 4X		
Overload Protection	Resetting, current-time dependant (1)		
Overvoltage Category	Category II according to DIN EN 61010-1		
Power Connection	Connector plug 3 P+ E per DIN EN 175301-03		
Pollution Grade	Grade 2 according to DIN EN 61010-1		
Maximum Elevation	6561 feet		
Ambient Temperature	14° to 122°F (2)		
Allowable Humidity	90% relative humidity, non condensing		

(1) Overload protection of the motor is dimensioned so that the motor and the power supply board are protected. As soon as the load is within the torque range, the actuator will begin operating again.
(2) At temperatures below 14°F and if there is condensation, the heating element should be activated.

Wiring Diagrams

Control

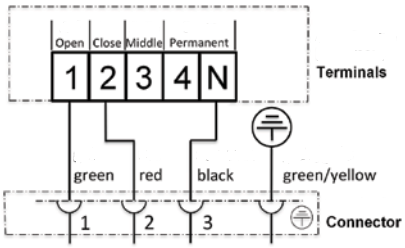

Feedback

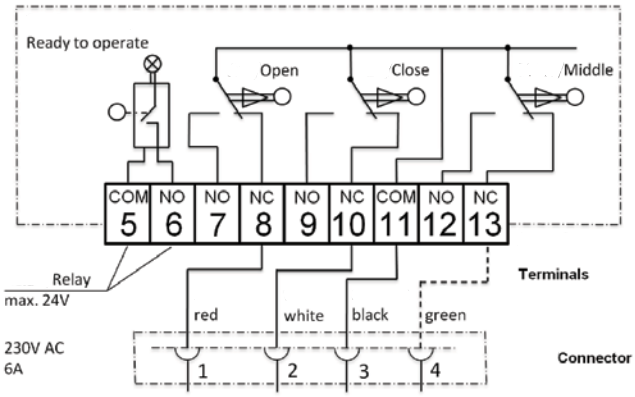

Key Design Features

The Type 145 Butterfly Valve utilizes several design features to protect electric actuators and increase the useful life of the valve.

Seals

The shaft is sealed with a bushing assembly on either side of the disc. Each bushing utilizes a double o-ring seal totalling eight shaft seals in every valve. Alternative o-ring shaft sealing designs are commonly found in competitive boot style thermoplastic butterfly valves. However, these solutions often rely upon elastomer on elastomer seals which can be unreliable, especially in chemical process applications or when working temperatures deviate from standard conditions. The Type 145 shaft seal design eliminates the need elastomer on elastomer seals, providing an industry tested dynamic double o-ring seal against a ridged thermoplastic surface.

The shaft, disc and face seals all operate independently from one another. This eliminates issues common to booted style centric valves such as crimping, where the compression of the valve between two flanges causes the boot to ripple. This can lead to increased operating torque and burn out electric actuators

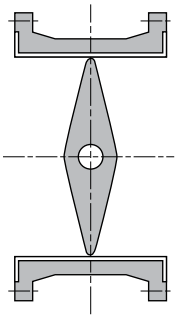

Centric

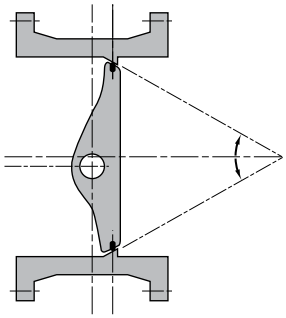

Double Eccentric

Double Eccentric Design Principle

The Type 145 Butterfly Valve is designed using the double eccentric disc principle. When opening and closing, the disc is not in contact with the seat, significantly reducing component wear. This design principle greatly reduces the operating torque and required elastomeric sealing material. The reduction in sealing material decreases the impact of elastomeric swelling which can lead to increased operating torque and can cause electric actuators to burn out.

Technical Data

Flow

The following information is based on water applications at 68° F

Cv Value

Size (inch)	d (mm)	Cv (gal/min)
2	63	103
2½	75	154
3	90	210
4	110	455
5	140	805
6	160	1162
8	225	2772
10	280	3570
12	315	5110

Flow Characteristics

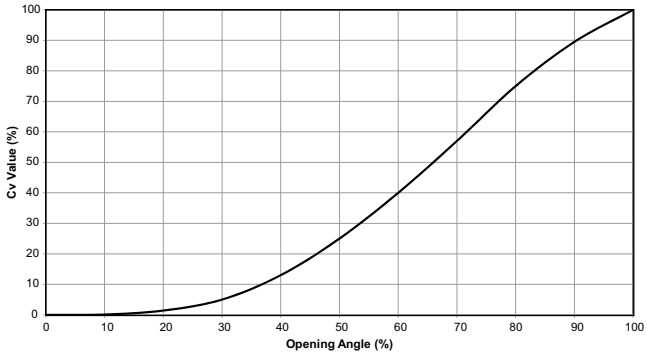

Technical Data

Pressure Temperature Curves

The following graphs are based on a 25 year lifetime water or similar media application

PVC

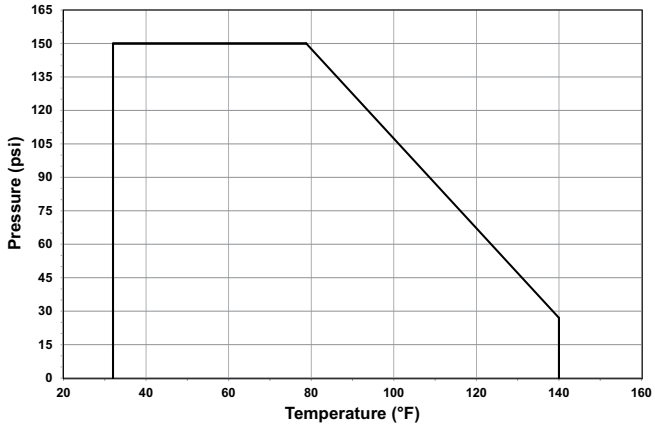

CPVC

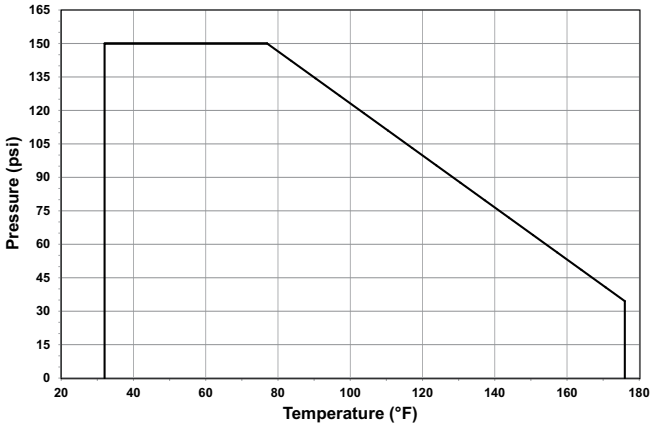

PP

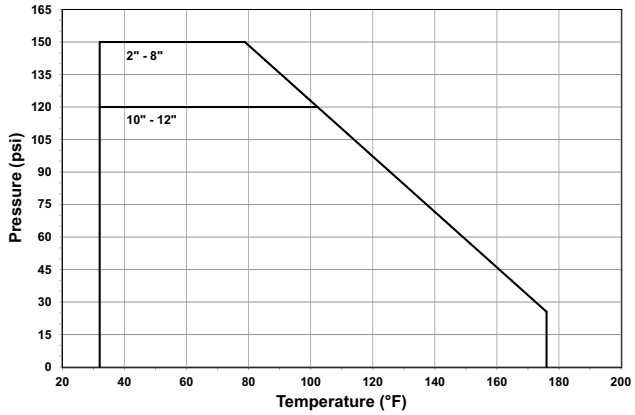

ABS

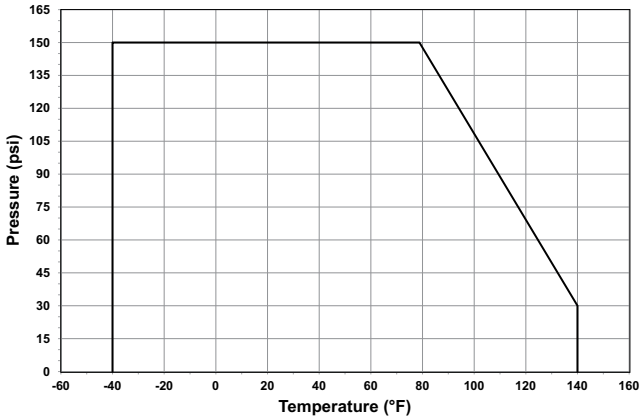

PVDF

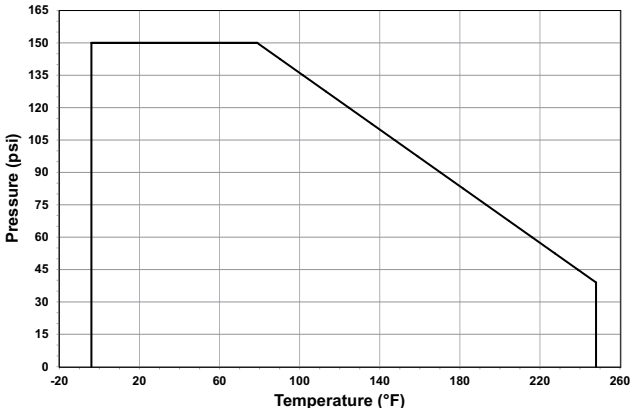

Pressure-Temperature

Material	Temperature Range (°F)	Max Pressure (psi)
PVC	32 to 140	150
CPVC	32 to 176	150
PP	32 to 176	150*
ABS	-40 to 140	150
PVDF	-4 to 284	150

*Dependant on size as shown in P-T curves

Vacuum Service

The Type 145 is rated for full vacuum service. Maximum differential pressure of 15psi at 122°F.

Dimensions

The following tables are shown in millimeters unless otherwise specified

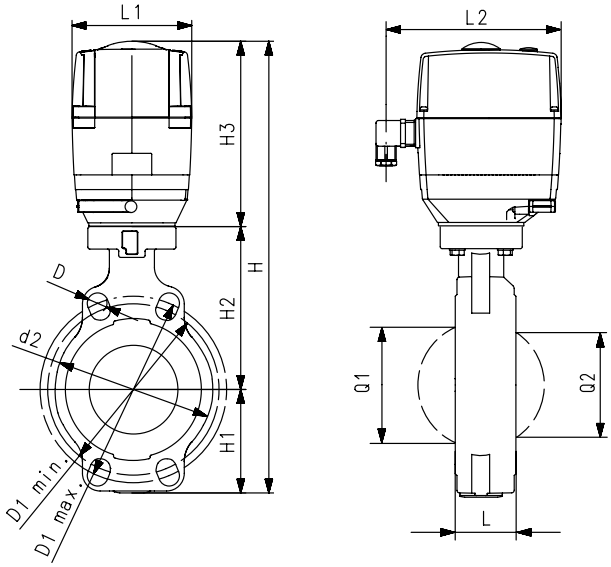

All Materials w/o Manual Override

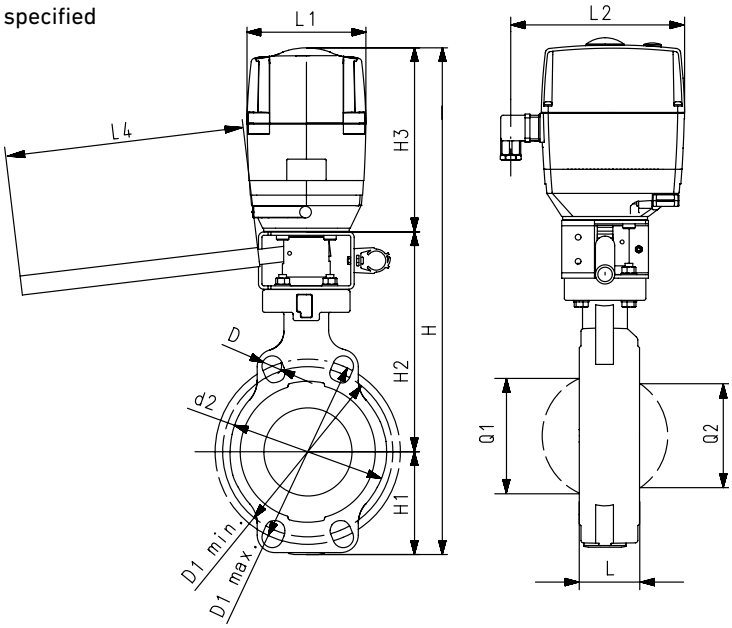

All Materials w/ Manual Override

All Materials without Manual Override

Size (inch)	d2	D	D1 min	D1 max	H	H3	L	L1	L2	Q1	Q2
2	104	19	120	125	415	188	45	122	180	40	-
2½	115	19	140	145	428	188	46	122	180	54	35
3	131	19	150	160	428	188	49	122	180	67	50
4	161	19	175	191	460	188	56	122	180	88	74
5	187	23	210	216	487	188	64	122	180	113	97
6	215	24	241	241	508	188	72	122	180	139	123
8	267	23	290	295	575	208	73	122	180	178	169
10	329	25	353	362	677	208	113	122	180	210	207
12	379	25	400	432	721	208	113	122	180	256	253

All Materials with Manual Override

Size (inch)	d2	D	D1 min	D1 max	H	H1	L	L1	L2	L4	Q1	Q2
2	104	19	120	125	475	77	45	122	180	200	40	-
2½	115	19	140	145	488	83	46	122	180	200	54	35
3	131	19	150	160	488	89	49	122	180	200	67	50
4	161	19	175	191	520	104	56	122	180	250	88	74
5	187	23	210	216	547	117	64	122	180	250	113	97
6	215	24	241	241	568	130	72	122	180	250	139	123
8	267	23	290	295	635	158	73	122	180	250	178	169

Electrically Actuated Lug Butterfly Valve

Type 147

General

- **Size**: 2"–12"
- **Outer Body**: Glass-filled PP
- **Material**: PVC, CPVC, PROGEF® Standard PP, ABS, SYGEF® Standard PVDF
- **Seals**: EPDM, FPM, PTFE/FPM
- **Stem**: 316 stainless steel
- **Voltage**: 100-230VAC, 24VAC/DC
- **Connection**: ANSI 150
- **Actuator Housing**: Glass-filled PP
- **Manual Override**: Integrated
- **End Stops**: Open, close, programmable middle position
- **Position Indicator**: LED, optical, integrated
- **Position Feedback**: Open, close, middle
- **Heater**: 10 position adjustable

Sample Specification

The Type 147 Electrically Actuated Butterfly Valve shall be lug style compatible with ANSI B16.5 150 lb flange patterns. The disk operation shall utilize double eccentric design principles. The shaft shall be non-wetted by a bushing assembly with double O-ring seals and fixed at both ends. The face seal shall be a Q-ring compatible with flat and serrated flange adapters. The face, disk and shaft seals shall operate independently. The wetted body and disk shall be of like materials. Valves shall be rated for bidirectional use. The operator mounting flange shall be comply with ISO standards. All valves shall be tested in accordance to ISO9393 and designed to ISO16136 standards. All valves shall be manufactured under ISO9001 for Quality and ISO14001 for Environmental Management. Following assembly, every valve shall be tested and certified bubble tight exceeding Class VI standards.

Material Specification

PVC valves shall meet ASTM D1784 cell classification 12454 standards. CPVC valves shall meet ASTM D1784 cell classification 23447-B standards. PP valves shall meet ASTM D5847-14 cell classification PP0510B66851 standards. ABS valves shall meet ASTM D3965 cell classification 42222 standards. PVDF valves shall be type 1, grade 2 according to ASTM D3222 standards. Valves of all materials shall be RoHS compliant.

Key Valve Certifications

- **NSF 61**: PVC and CPVC
- **FDA CFR 21 177.1520**: PP and PVDF
- **FDA CFR 21 177.2600**: EPDM and FPM
- **FDA CFR 21 177.1550**: PTFE
- **ABS**: All materials
- **USP Class VI (physiological non-toxic)**: EPDM, FPM, PTFE, PP and PVDF

Components

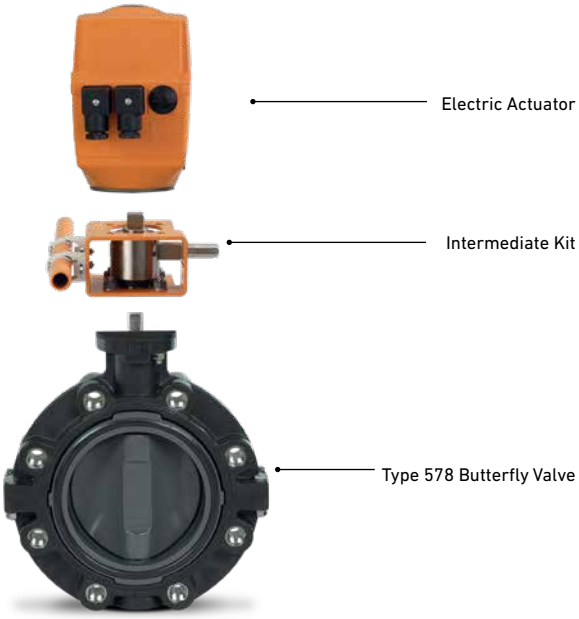

Optional Features

- **Positioner**: Current, voltage
- **Network**: Profibus DP
- **Fail Safe Return**: Battery back up, externally powered board
- **Smart Module**: Cycle monitoring, cycle counter, cycle extension, motor current monitoring
- **Manual Loading Station**: Local control box
- **Stem Extension**: Two piece stainless steel
- **Shaft**: Titanium, Hastelloy-C
- **Hardware**: Alternatives available upon request
- **Cleaned**: Silicone free/oil free

Actuator Certifications/Compliance

- Machinery Directive 2006/42/EC, Annex II B
- EMV Directive CE 2004/108/CE
- EMV VDE 0843 Section 20
- Low Voltage Directive CE 2006/95/CE
- Vibration Testing EN 60068-2-6
- Interface ISO 5211
- Actuators for Inustrial Valves EN 15714-2

Key Design Feature

Actuator Status Indication

An LED light tube illuminates in several different colors to communicate different actuator status' to an operator. A list of actuator status indications is shown below, please note that this list does not include some maintenance/setup color patterns.

LED Indication

Color	Indication
Red	Actuator in OPEN position
Green	Actuator in CLOSED position
White	Actuator in MIDDLE position
Flashing White	Actuator cycling
Flashing Yellow	Fault present
Flashing Blue	Actuator in learning mode
Green/Yellow	Positioner setpoint value reached
Turquoise	Adjustment run/color inversion operation

Actuator Technical Data

	EA 45	EA 120	EA 250
Valve Size	2"-2½"	3"-6"	8"-12"
Cycle Time	6s/90°	15s/90°	20s/90°
Rated Cycles at 70°F	100,000	100,000	75,000
Actuating Angle	Standard set at 90°, max. 355°		
Housing Material	Glass-filled PP		
Position Feedback	230V, 6 Amp		
Emergency Manual Override	Integrated		
Rated Voltage	100- 230V, 50/60 Hz 24V, AC/DC, 50/60Hz		
Rated Voltage Tolerance	+/- 15%		
Rated Output	55VA @ 100-230VAC 60VA @ 24VAC/DC	50VA @ 100-230VAC 55VA @ 24VAC/DC	60VA @ 100-230VAC 65VA @ 24VAC/DC
Calculated Current Draw	0.55A @ 100VAC 0.24A @ 230VAC 2.5A @ 24VDC	0.5A @ 100VAC 0.22A @ 230VAC 2.3A @ 24VDC	0.55A @ 100VAC 0.26A @ 230VAC 2.7A @ 24VDC
Duty Cycle	50%	50%	35%
Protection Class	IP 67 per EN 60529 (3) UL/CSA: For interior use Nema 4X		
Overload Protection	Resetting, current-time dependant (1)		
Overvoltage Category	Category II according to DIN EN 61010-1		
Power Connection	Connector plug 3 P+ E per DIN EN 175301-03		
Pollution Grade	Grade 2 according to DIN EN 61010-1		
Maximum Elevation	6561 feet		
Ambient Temperature	14° to 122°F (2)		
Allowable Humidity	90% relative humidity, non condensing		

(1) Overload protection of the motor is dimensioned so that the motor and the power supply board are protected. As soon as the load is within the torque range, the actuator will begin operating again.
(2) At temperatures below 14°F and if there is condensation, the heating element should be activated.

Technical Data

Flow

The following information is based on water applications at 68° F

Cv Value

Size (inch)	d (mm)	Cv (gal/min)
2	63	103
2½	75	154
3	90	210
4	110	455
5	140	805
6	160	1162
8	225	2772
10	280	3570
12	315	5110

Flow Characteristics

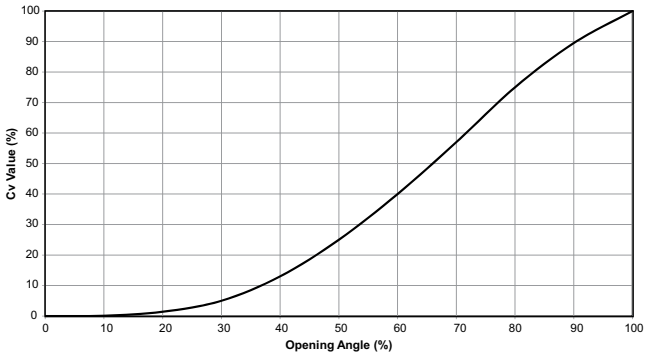

Technical Data

Pressure Temperature Curves

The following graphs are based on a 25 year lifetime water or similar media application

PVC

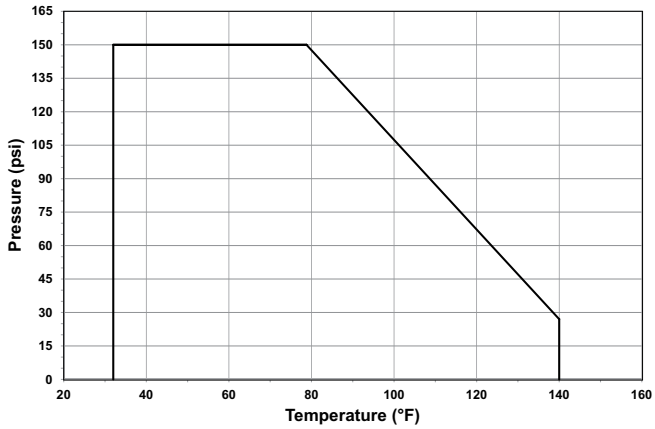

CPVC

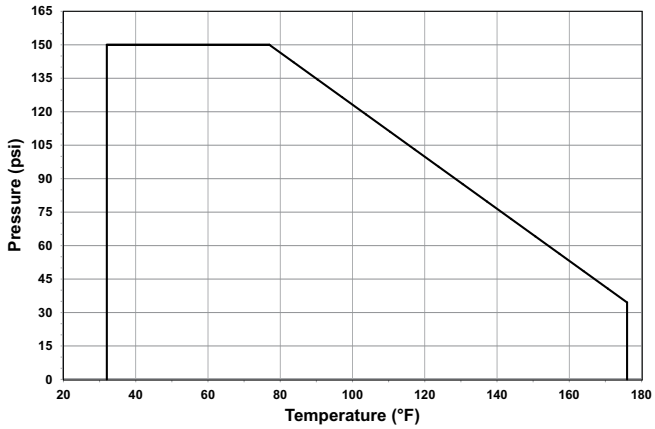

PP

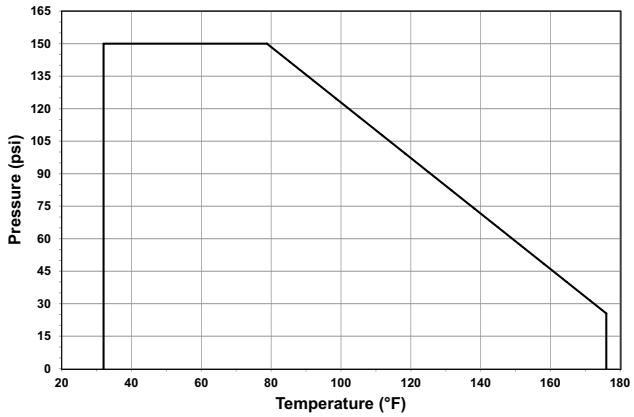

ABS

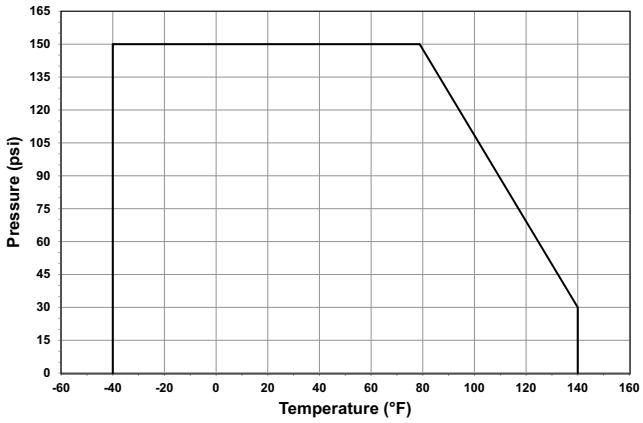

PVDF

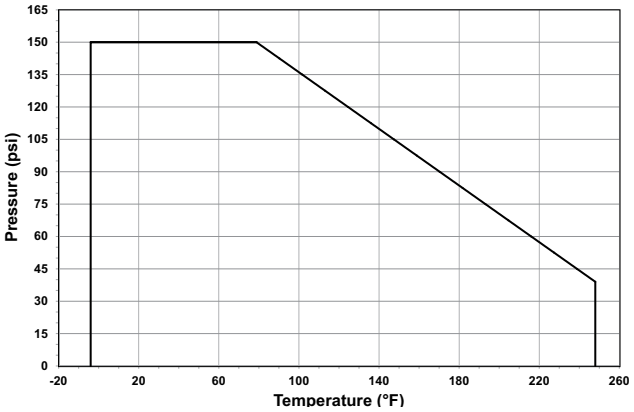

Pressure-Temperature

Material	Temperature Range (°F)	Max Pressure (psi)
PVC	32 to 140	150
CPVC	32 to 176	150
PP	32 to 176	150
ABS	-40 to 140	150
PVDF	-4 to 284	150

Vacuum Service

The Type 147 is rated for full vacuum service. Maximum differential pressure of 15psi at 122°F.

Dimensions

The following tables are shown in millimeters unless otherwise specified

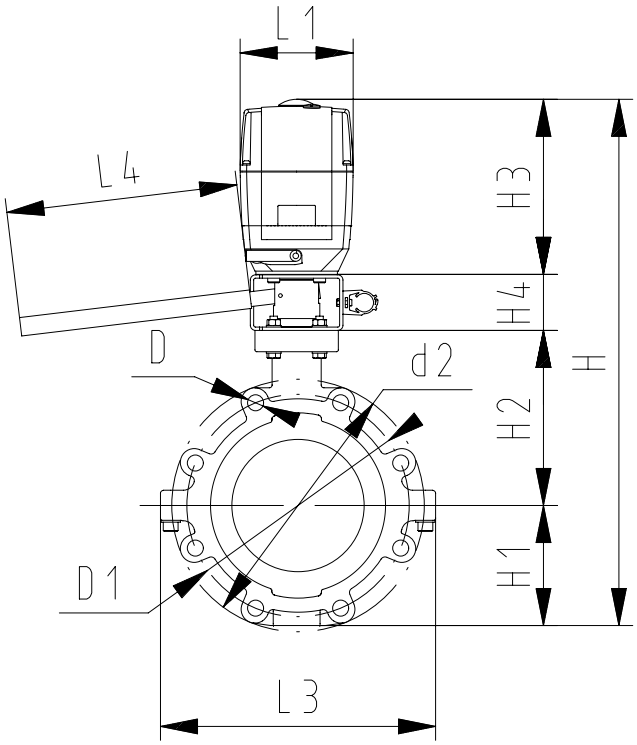

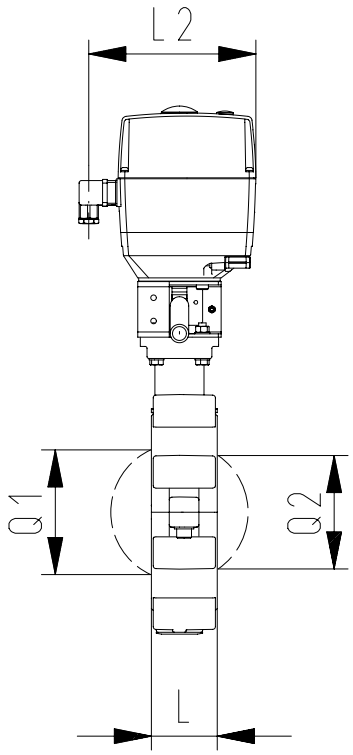

All Materials with Manual Override

Size (inch)	d2	D	D1	H	H1	L	L1	L2	L3	L4	Q1	Q2
2	160	UNC 5/8	120.6	475	77	45	122	180	165	200	40	-
2½	180	UNC 5/8	139.7	488	83	46	122	180	182	200	54	35
3	195	UNC 5/8	152.4	488	89	49	122	180	210	200	67	50
4	226	UNC 5/8	190.5	520	106	56	122	180	240	250	88	74
5	258	UNC 3/4	215.9	547	121	64	122	180	272	250	113	97
6	284	UNC 3/4	241.3	568	133	72	122	180	300	250	139	123
8	341	UNC 3/4	298.4	635	159	73	122	180	360	250	178	169

Dimensions

The following tables are shown in inches unless otherwise specified

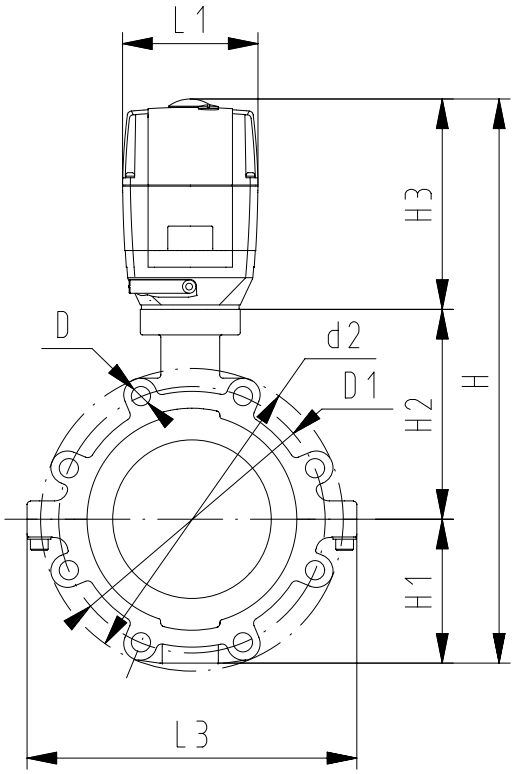

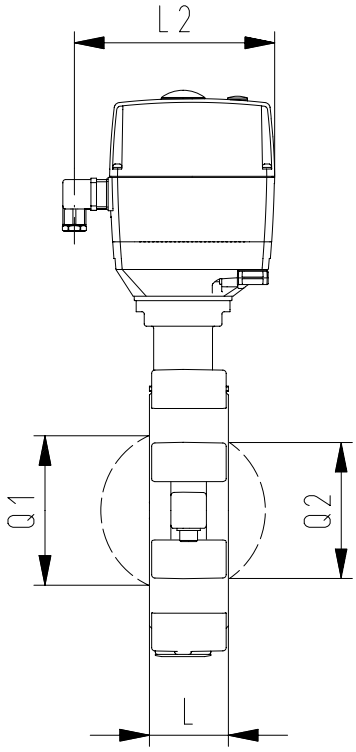

All Materials without Manual Override

Size (inch)	d2	D	D1	H	H1	L	L1	L2	L3	Q1	Q2
2	160	UNC 5/8	120.6	415	77	45	122	180	165	40	-
2½	180	UNC 5/8	139.7	428	83	46	122	180	182	54	35
3	195	UNC 5/8	152.4	428	89	49	122	180	210	67	50
4	226	UNC 5/8	190.5	460	106	56	122	180	240	88	74
5	258	UNC 3/4	215.9	487	121	64	122	180	272	113	97
6	284	UNC 3/4	241.3	508	133	72	122	180	300	139	123
8	341	UNC 3/4	298.4	575	159	73	122	180	360	178	169
10	412	UNC 7/8	362	677	205	113	122	180	440	210	207
12	482	UNC 7/8	431.8	721	234	113	122	180	510	256	253

Electric Actuator
EA25-250

General

- **Nominal Torque:** 10-100 Nm
- **Peak Torque:** 25-250 Nm
- **Actuator Housing**: Glass-filled PP
- **DIN Plug Connection:** Cable gland
- **Manual Override**: Integrated
- **End Stops**: Open, close, programmable middle position
- **Position Indicator**: LED, optical, integrated
- **Position Feedback**: Open, close, middle
- **Heater**: 10 position adjustable
- **Protection Class:** IP67

Optional Features

- **Positioner**: Current, voltage
- **Network**: Profibus DP
- **Fail Safe Return**: Battery back up, externally powered board
- **Smart Module**: Cycle monitoring, cycle counter, cycle time extension, motor current monitoring
- **Manual Loading Station**: Local control box

Sample Specification

The EA25-250 shall be partial a turn electric actuator utilized in either open/close or modulating applications. Position detection components shall be of solid state design with three programmable end stops available and each end stop shall utilize a monostable relay for position feedback. End stops shall be adjustable via a series of push buttons. An internal adjustable heater shall be integrated and utilize a temperature sensor within the actuator housing. A 7 segment display shall communicate fault status. Optical position indication shall be integrated and reinforced with a color specific LED. All actuators shall be manufactured under ISO9001 for Quality and ISO14001 for Environmental Management.

Actuator Certifications/Compliance

- Machinery Directive 2006/42/EC, Annex II B
- EMV Directive CE 2004/108/CE
- EMV VDE 0843 Section 20
- Low Voltage Directive CE 2006/95/CE
- Vibration Testing EN 60068-2-6
- Actuators for Industrial Valves EN 15714-2

Key Design Features

Overload Protection

The motor's power supply features overload protection by monitoring its current draw, which is directly proportional to applied load and will shut down the actuator if the applied load exceeds the rated torque. The actuator will automatically regain functionality once the applied load is reduced.

Middle Position

The programmable middle position allows an operator to utilize a third end stop and feedback position. The middle position can be any rotational point between the open/close end stops. The middle position feedback signal and control signal operate independently so the feedback signal can be utilized with two position actuators to alert that a specific point in the actuator's cycle has been reached.

Actuator Status Indication

An LED light tube illuminates in several different colors to communicate different actuator status' to an operator. A list of actuator status indications is shown below, please note that this list does not include some maintenance/setup color patterns.

LED Indication

Color	Indication
Red	Actuator in OPEN position
Green	Actuator in CLOSED position
White	Actuator in MIDDLE position
Flashing White	Actuator cycling
Flashing Yellow	Fault present
Flashing Blue	Actuator in learning mode
Green/Yellow	Positioner setpoint value reached
Turquoise	Adjustment run/color inversion operation

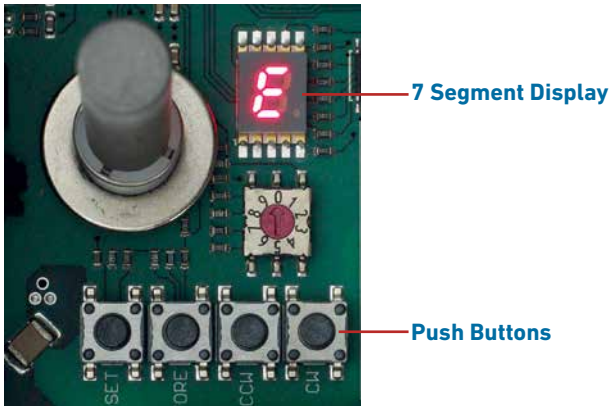

7 Segment Display

A display screen on the actuator's main board clearly communicates actuator and accessory fault status to greatly simply trouble shooting and ease of operation.

Push Buttons

A series of push buttons on the actuator's main board (set, store, CCW and CW) allow an operator to easily adjust end positions, invert LED position indication colors, manually jog the actuator and several other functions with simple, clear programming logic.

Heater

An adjustable heater is integrated into the EA25-250 in order to protect the actuator subcomponents in cold applications and to prevent water from condensing inside the actuator housing in humid environments. The heater will turn on when the actuator's internal temperature reaches a designated value and turn off after it has heated to a designated value. These parameters can be adjusted by rotating the arrow on the dial selector shown below.

Heater Options

Dial Setting	Heater Turned On (°F)	Heater Turned Off (°F)
0 (default)	32	41
1	41	50
2	50	59
3	59	68
4	68	77
5	77	86
6	86	95
7	95	104
8	104	113
9	104	113

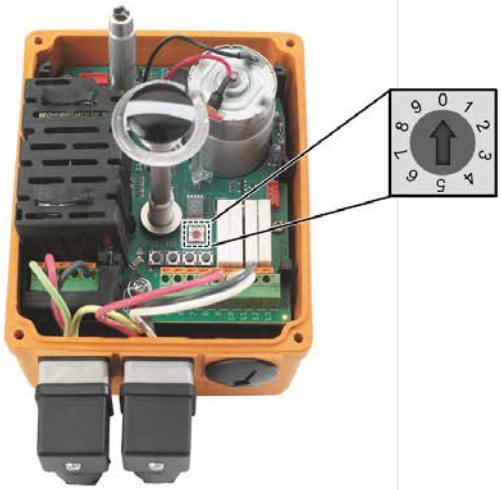

Actuator Technical Data

	EA 25	EA 45	EA 120	EA 250
Nominal Output Torque (Nm)	10	20	60	100
Peak Output Torque (Nm)	25	45	120	250
Rated Voltage	100- 230VAC, 50/60 Hz 24VAC/DC, 50/60Hz			
Cycle Time	5s/90°	6s/90°	15s/90°	20s/90°
Rated Cycles at 70°F	250,000	100,000	100,000	75,000
Weight (lb)	4.6	4.8	7.9	11
Actuating Angle	Standard set at 90°, max. 355°			
Housing Material	Glass-filled PP			
Position Feedback	Monostable, changeover contacts 230V, 6 Amp			
Emergency Manual Override	Integrated			
Fuse	SMD fuse 2A, not replaceable			
Rated Voltage Tolerance	+/- 15%			
Rated Output	35VA @ 100-230VAC 40VA @ 24VAC/DC	55VA @ 100-230VAC 60VA @ 24VAC/DC	50VA @ 100-230VAC 55VA @ 24VAC/DC	60VA @ 100-230VAC 65VA @ 24VAC/DC
Calculated Current Draw	0.35A @ 100VAC 0.15A @ 230VAC 1.7A @ 24VDC	0.55A @ 100VAC 0.24A @ 230VAC 2.5A @ 24VDC	0.5A @ 100VAC 0.22A @ 230VAC 2.3A @ 24VDC	0.55A @ 100VAC 0.26A @ 230VAC 2.7A @ 24VDC
Duty Cycle	100%	50%	50%	35%
Protection Class	IP 67 per EN 60529 UL/CSA: For interior use Nema 4X			
Impact Class	IK06 according to IEC62262			
Overload Protection	Resetting, current-time dependant (1)			
Overvoltage Category	Category II according to DIN EN 61010-1			
Power Connection	Connector plug 3 P+ E per DIN EN 175301-03			
Pollution Grade	Grade 2 according to DIN EN 61010-1			
Maximum Elevation	6561 feet			
Ambient Temperature	14° to 122°F (2)			
Allowable Humidity	90% relative humidity, non condensing			

(1) Overload protection of the motor is dimensioned so that the motor and the power supply board are protected. As soon as the load is within the torque range, the actuator will begin operating again.
(2) At temperatures below 14°F and if there is condensation, the heating element should be activated.

Wiring Diagrams

Control

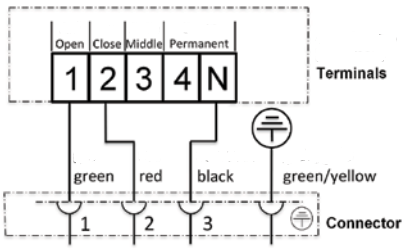

Feedback

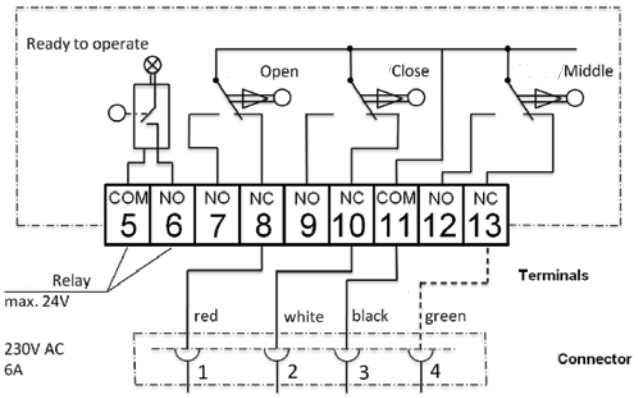

Positioner Board

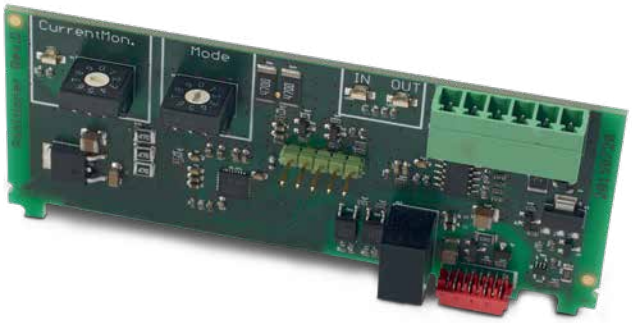

Positioner Board

The EA25-250 Positioner Board is easily installed and does not require the operator to perform a learning run once a new unit is installed or after the ends stops are adjusted because the position sensor within the actuator assembly can automatically span the control signal and self configure the positioner to allow for immediate use. The positioner board also features a current monitor to allow an operator to regulate any increases in operating torque.

Monitor Board

Monitor Board

The EA25-250 Monitor Board allows an operator to set specific parameters under which an actuator will function. It features a current monitor, cycle time monitor and cycle counter, all of which will cause the actuator to communicate a fault when one of the monitor board setpoints has been reached. The monitor board also features a cycle time extension which simply increases the cycle time of an actuator.

Position Board Input/Output Options

Dial Setting	Input	Output
0 (default)	4 - 20mA	4 - 20mA
1	0 - 10V	4 - 20mA
2	4 - 20mA (Inverted)	4 - 20mA
3	0 - 10V (Inverted)	4 - 20mA
4	4 - 20mA	4 - 20mA (Inverted)
5	0 - 10V	4 - 20mA (Inverted)
6		No function
7	-	4 - 20mA
8	-	4 - 20mA (Inverted)
9		No function

Positioner Board Current Monitor Setpoints

Dial Setting	EA25 (mA)	EA45 (mA)	EA120 (mA)	EA250 (mA)
0	25	25	50	50
1	100	300	300	400
2	150	350	400	500
3	200	400	500	600
4	250	450	600	700
5	300	500	700	800
6	400	600	800	1000
7	500	700	900	1200
8	600	900	1000	1500
9 (factory)	700	1100	1200	1800

Current Monitor Setpoints

Dial Setting	EA25 (mA)	EA45 (mA)	EA120 (mA)	EA250 (mA)
0	25	25	50	50
1	100	300	300	400
2	150	350	400	500
3	200	400	500	600
4	250	450	600	700
5	300	500	700	800
6	400	600	800	1000
7	500	700	900	1200
8	600	900	1000	1500
9 (factory)	700	1100	1200	1800

Cycle Time Monitor Setpoints

Dial Setting	EA25 (sec)	EA45 (sec)	EA120 (sec)	EA250 (sec)
0	8	7	20	30
1	11	10	30	40
2	14	13	35	45
3	17	16	40	50
4 (factory)	20	19	45	55
5	23	22	50	60
6	26	25	55	65
7	29	28	60	70
8	32	31	65	80
9	36	34	70	90

Cycle Time Extension Options (per 90°)

Dial Setting	EA25 (sec)	EA45 (sec)	EA120 (sec)	EA250 (sec)
0 (default)	7	7	25	27
1	10	10	28	35
2	13	13	32	40
3	15	15	38	45
4	18	18	42	50
5	20	20	48	55
6	23	23	52	60
7	25	25	58	65
8	28	28	62	70
9	30	30	67	75

Cycle Counter Setpoints

Dial Setting	EA25-250 (Count)
0	1
1	10,000
2	20,000
3	30,000
4 (factory)	40,000
5	50,000
6	75,000
7	100,000
8	150,000
9	200,000

Profibus Board

- **Actuator Voltage:** 100-230VAC, 24V
- **Protocol:** DP-V0
- **Baud Rate:** 9600-1.5M
- **Connection:** M12 (male and female)
- **Factory Address:** 126
- **Optional Addresses:** 1-125

Digital Output: Master→Slave

Signal Type/Byte	Bit	Action	Parameter
EACON Electric Actuator Control Byte	Bit 0	Off	close
	Bit 1	On	open
	Bit 2	Middle	middle
	Bit 3	Stop	stop
	Bit 4	Positioner active	positioner_enabled
	Bit 5-7	Reserved	reserved
ACKRST	Bit 0	Confirm error	err_ack
	Bit 1	Reset cycle counter	cycle_cntr_reset
	Bit 2-7	Reserved	reserved
POSSET	Bit 0-7	Setpoint for positioner from 0-100%, when position regulator is active	0... 100 setpoint range 0= close, 100= open 101... 255= invalid value

Digital Output: Slave→Master

Signal Type/Byte	Bit	Action	Parameter
TYPVLT	Bit 0-3	0= EA25, 1= EA45, 2= EA120, 3= EA250	ea_type
	Bit 4-7	0= 24V, 1= 100-230VAC	ea_voltage
STATE	Bit 0	Feedback close	limit_switch_close
	Bit 1	Feedback open	limit_switch_open
	Bit 2	Feedback middle	limit_switch_middle
	Bit 3	Actuator moving	actuator_moving
	Bit 4	Teaching active	teaching_active
	Bit 5	Ready to operate	ready_relay
	Bit 6-7	Reserved	reserved
POSACT	Bit 0-7	Actuator value from 0-100% 0= closed, 100= open, 101...255= not valid	position_actual_value
CURRENT	Bit 0-15	Absolute value motor current (mA)	motor_current
TEMP	Bit 0-7	Temperature at sensor in actuator (°C)	temperature_base
CYCLES	Bit 0-31	Numbers plug-in cycles since last reset	cycle_counter
ERRFLAGS	Bit 0	Voltage too low	undervoltage
	Bit 1	Temp too high	over_temp_case
	Bit 2	Cycle too long	max_positioning_time
	Bit 3	Heating out of order	heating
	Bit 4	Error position detected	position_detection_fail
	Bit 5	Position not specific	position_out_of_range
	Bit 6	Override is activated	manual_actuation
	Bit 7	No communication with accessory	accessory_no_reply
	Bit 8	Fail-safe unit activated	powerfail_action
	Bit 9	Battery voltage <50%	powerfail_accu_lvl_warn
	Bit 10	Battery defect	powerfail_accu_defect
	Bit 11	Restard EA via Watchdog recovery	watchdog_recovery
	Bit 12	Motor current monitor tripped	motor_current_overflow
	Bit 13	Error motor driver	mot_driver_overload
	Bit 14-31	Reserved	reserved

Fail-safe Return Module

The EA25-250 Fail-safe Return Module is available with or without an integrated battery pack. The version with the battery pack features two small but powerful batteries that are secured to a module board that easily fits inside the actuator housing. No external wiring is required and the batteries charge by utilizing the actuator power. The batteries hold enough power to cycle the actuator several times but it is not recommended to use the Fail-safe Return Module as the main power source to cycle an actuator. The version without the battery pack is designed so that several actuators can be powered by a single external 24VDC battery bank. Both module types are installed on the actuator the same way and feature a dip switch so that the operator can choose between fail-safe to open or fail-safe to close functionality.

Dimensions

The following tables are shown in millimeters unless otherwise specified

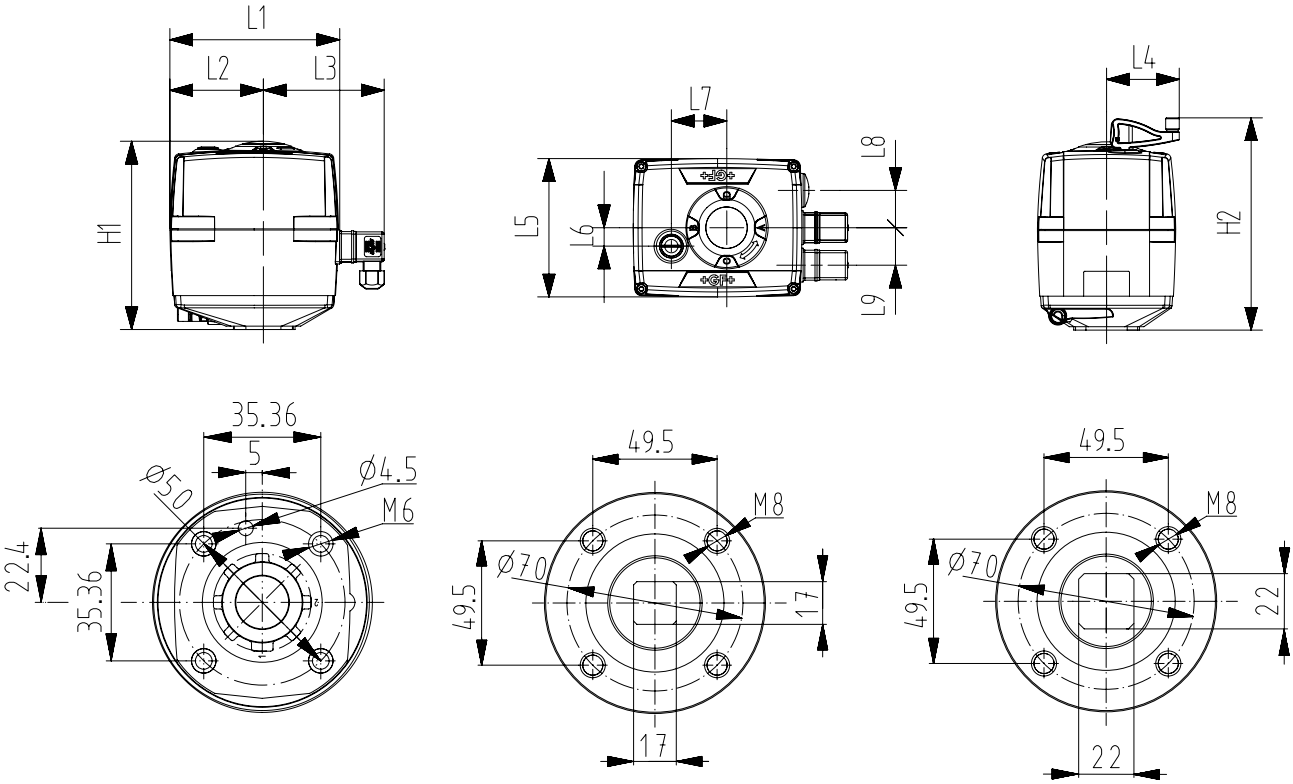

EA25/45 Base

EA120 Base

EA 250 Base

EA25-250

Type	ISO	H1	H2	L1	L2	L3	L4	L5	L6	L7	L8	L9
EA25	F05	167	189	150	83	108	64	122	16	49	33	33
EA45	F05	167	189	150	83	108	64	122	16	49	33	33
EA120	F07	190	212	150	83	108	64	122	16	49	33	33
EA250	F07	208	230	150	83	108	64	122	16	49	33	33

Local Control Box
LCB 201, 202

General

- **Size**: 6" x 6"
- **Material**: Fiberglass reinforced polyester
- **Hardware**: Stainless steel
- **Gasket**: Polyurethane
- **Voltage**: 110VAC, 24VDC
- **Position Indicator**: Green lamp (open), red lamp (closed)
- **Operator Selector**: Three position switch (manual, off, auto)
- **Position Selector**: Three position switch (open, off, closed)
- **Connection**: Cable gland
- **Mounting Tabs**: Integrated
- **Ground Connection**: Integrated

Optional Features

- **Connection**: Conduit
- **Material**: Alternatives available upon request
- **Protection Class:** Alternatives available upon request
- **Voltage:** 220VAC
- **Gasket:** Alternatives available upon request
- **Made-to-Order**: Custom enclosures available upon request

Key Certifications

- NEMA 4
- UL

Sample Specification

The Local Control Box (LCB) shall allow for the local control of an electrically actuated valve, including the local shut-off of remote command, local operation of the actuator and complete command stopping abilities. The control signalization shall be of open/close style four wire logic. Dual panel mounted lamps shall indicate either Open or Closed positioning during both remote and local operation. The enclosure shall be of NEMA 4 protection class, sealed with a gasket barrier and be of a mountable design. The lamps and three position switches indications shall be clearly marked and laser engraved. The standard assembly shall accommodate the control of a single valve.

Definition of Type

- **LCB 201:** 110VAC
- **LCB 202:** 24VDC

Dimensions

All following dimensions are shown in inches unless otherwise noted.

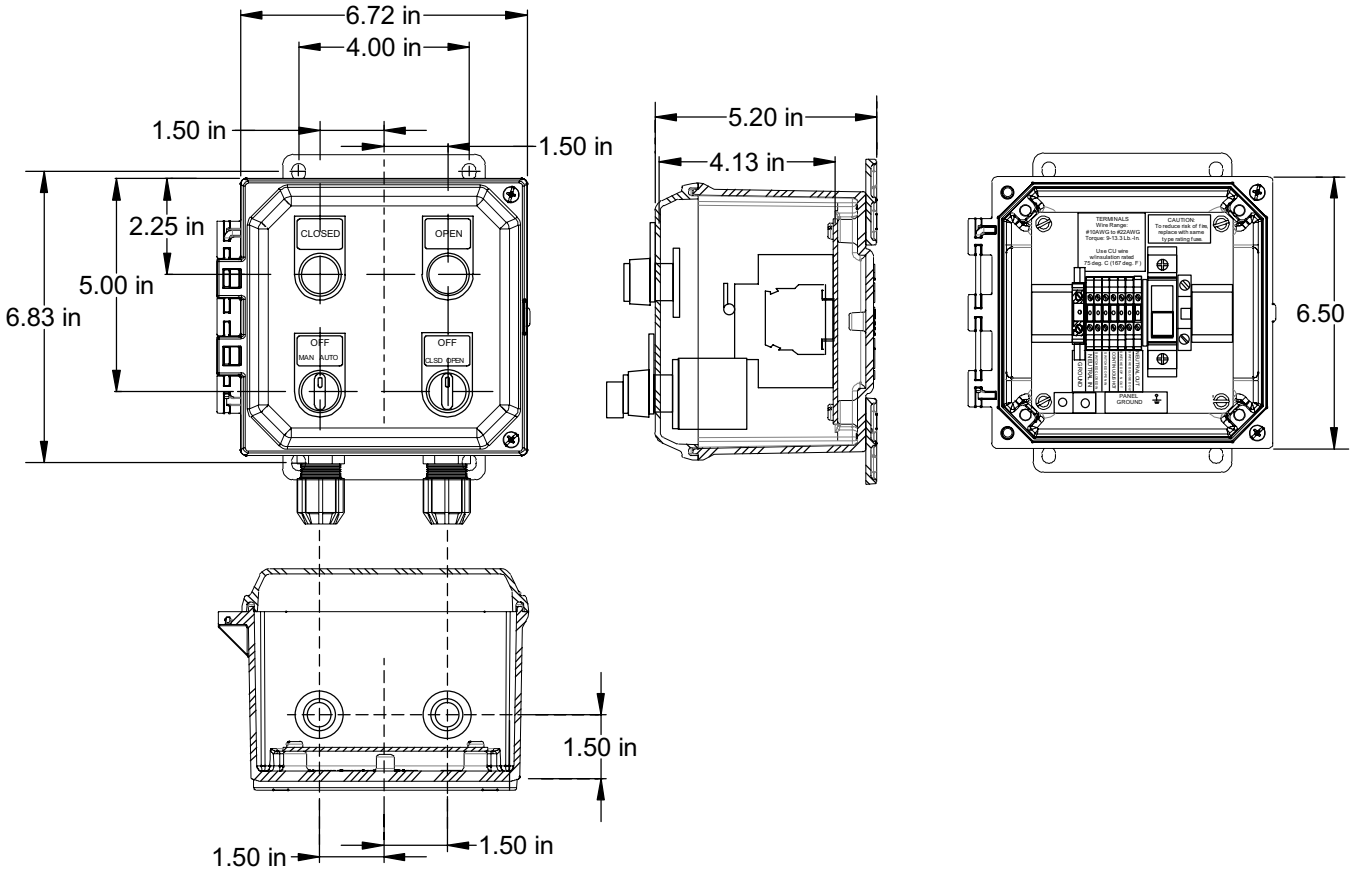

Wiring

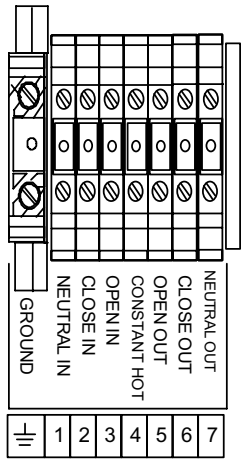

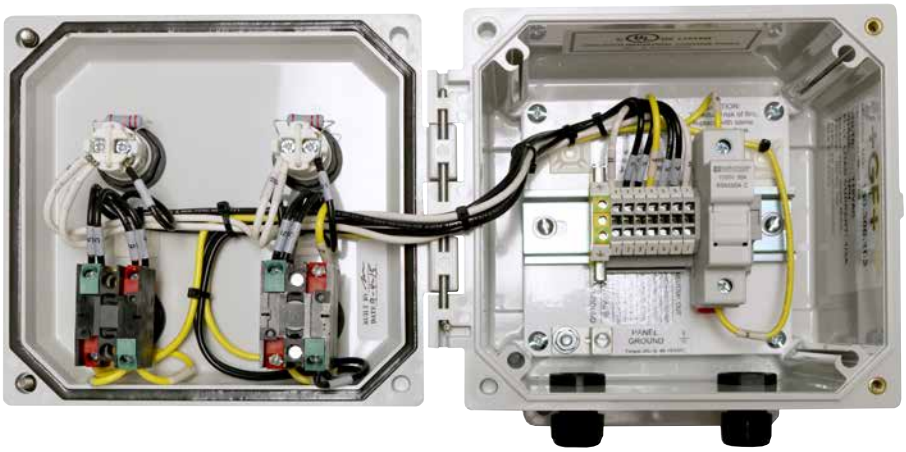

Pneumatically Actuated Ball Valve
Type 230-233

General

- **Size**: ⅜"–4"
- **Material**: PVC, CPVC, PROGEF® Standard PP, ABS, SYGEF® Standard PVDF
- **Seat**: PTFE
- **Seals**: EPDM, FPM
- **End Connection**: Solvent cement socket, threaded, flanged, fusion spigot, fusion socket
- **Actuator Housing ⅜"–2"**: Glass-filled PP
- **Actuator Housing 2½"–4"**: Anodized aluminum
- **Manual Override ⅜"–2":** Standard versions with and without
- **Stroke Limiter 2½"-4":** Integrated, ±10°
- **Mounting**: Stainless steel threaded inserts
- **Action**: Fail open, fail closed, and double acting
- **Position Indicator**: Optical, integrated

Sample Specification

The Type 230-233 Ball Valve shall be used in either open/close or modulating applications. The actuator shall be a PA11-45 depending on valve size. The ball valve shall be true union and utilize a floating ball design. The ball shall be fully molded and full port with two way blocking capability. The stem shall be blowout proof, utilizing a double o-ring seal and a predetermined break point opposite the media side of the stem seals. The seat carrier shall be adjustable and reverse threaded. The valve nut threads shall be of buttress type. Ball seats shall have an elastomeric backing o-ring and all elastomeric seals shall be of like material. ANSI flanged versions shall meet ANSI B16.5 150lb standards. All valves shall be tested in accordance to ISO9393 and designed to ISO16136 standards. All valves shall be manufactured under ISO9001 for Quality and ISO14001 for Environmental Management. Following manual assembly, every valve shall be tested and certified bubble tight exceeding Class VI standards. Following actuated assembly, every valve shall be tested to confirm functionality.

Material Specification

PVC valves shall meet ASTM D1784 cell classification 12454 standards. CPVC valves shall meet ASTM D1784 cell classification 23447-B standards. PP valves shall meet ASTM D5847-14 cell classification PP0510B66851 standards. ABS valves shall meet ASTM D3965 cell classification 42222 standards. PVDF valves shall be type 1, grade 2 according to ASTM D3222 standards. Valves of all materials shall be RoHS compliant.

Key Valve Certifications

- **NSF 61**: PVC and CPVC
- **FDA CFR 21 177.1520**: PP and PVDF
- **FDA CFR 21 177.2600**: EPDM and FPM
- **FDA CFR 21 177.1550**: PTFE
- **ABS**: All materials

Components

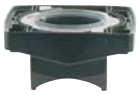

Key Design Feature

The Type 230-233 stem utilizes a pre-determined break point opposite the media side of the stem seals. This break point is a groove with an inner diameter that is less than the stem seal grooves. This ensures that if there is a stem failure, the failure will occur at that point and media will not leak to the outside of the valve.

Optional Features

- **Pilot Valve**: 24VAC/DC, 110VAC, 230VAC
- **Positioner**: Digital electro-pneumatic
- **Limit Switches**: Mechanical, inductive
- **Actuator Housing**: Alternative materials available upon request
- **Manual Override 2½"-4"**: Declutchable
- **Stroke Limiter ⅜"-2"**: ±45°
- **Manual Loading Station**: Local control box
- **Seals**: Alternative materials available upon request
- **Seat**: PVDF
- **End Connection**: Alternatives available upon request
- **Control Ball**: For throttling applications available ⅜"-2"
- **Vented Ball**: For sodium hypochlorite use
- **Cleaned**: Silicone free/oil free

Definition of Valve Type

- **Type 230:** ABS
- **Type 231:** PP
- **Type 232:** PVDF
- **Type 233:** PVC/CPVC

Key Design Feature

The Type 230-233 seat carrier is reverse threaded while the valve nut utilizes a standard thread. This ensures that the seat carrier is not inadvertently tightened when the valve nut is tightened thus avoiding an overtightening of the seat carrier which can cause several issues but the most common failure is stem breakage. This design feature is especially beneficial in pneumatically actuated applications where valves are rapidly cycled and valve stems endure high levels of induced stress.

A manual valve handle is included with Type 230-233 valves assembled by GF and doubles as a seat carrier adjustment tool by simply inserting the handle clip into the pre-molded notches on the seat carrier, making on-site maintenance quick and easy.

Actuator Technical Data

	PA 11/21	PA 30-45
Actuator Style	Rack and pinion	Scotch yoke
Control Media	Neutral, non aggressive gases (max. 104°F)	Neutral, non aggressive gases (max. 104°F)
Max. Allowable Control Pressure	100 psi	100 psi
Pneumatic Connection	⅛" BSP (NPT adapter supplied)	⅛" BSP (NPT adapter supplied) Namur compliant
Cycle Time	1-2 seconds	1-2 seconds
Actuation Angle	90°	90°
Action	Fail-safe close (FC)	Fail-safe close (FC)
	Fail-safe open (FO)	Fail-safe open (FO)
	Double acting (DA)	Double acting (DA)
Operating Temperature	14°F - 122°F	14°F - 176°F
Permissible Humidity	0-100%	0-95%
Position Indicator	Visual	Visual
Housing Material	PP-glass filled	Anodized aluminum

Actuator Type by Valve Size

	⅜	½	¾	1	1¼	1½	2	2½	3	4
Fail-safe Close (FC)	PA 11	PA 11	PA 11	PA 11	PA 21	PA 21	PA 21	PA 30	PA 40	PA 40
Fail-safe Open (FO)	PA 11	PA 11	PA 11	PA 11	PA 21	PA 21	PA 21	PA 30	PA 40	PA 40
Double Acting (DA)	PA 11	PA 11	PA 11	PA 11	PA 21	PA 21	PA 21	PA 35	PA 45	PA 45

Min. Operating Air Pressure (psi)

	⅜	½	¾	1	1¼	1½	2	2½	3	4
Fail-safe Close (FC)	60	60	60	60	60	60	60	43	60	60
Fail-safe Open (FO)	60	60	60	60	60	60	60	43	60	60
Double Acting (DA)	60	60	60	60	60	60	60	43	43	72

Technical Data

Flow

The following information is based on water applications at 68° F

Cv Value

Size (inch)	d (mm)	Cv (gal/min)
⅜	16	4.9
½	20	12.9
¾	25	24.5
1	32	49.0
1¼	40	70.0
1½	50	112.0
2	63	217.1
2½	75	350.0
3	90	490.0
4	110	770.0

Flow Characteristics

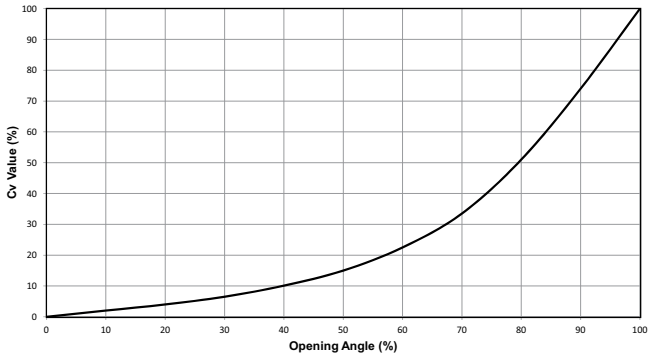

Technical Data

Pressure Temperature Curves

The following graphs are based on a 25 year lifetime water or similar media application

PVC

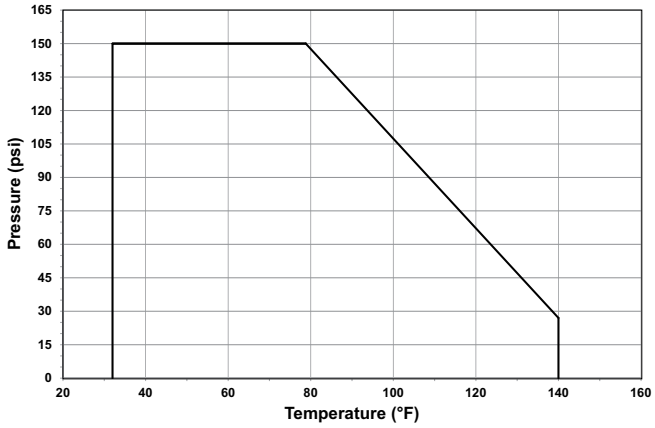

CPVC

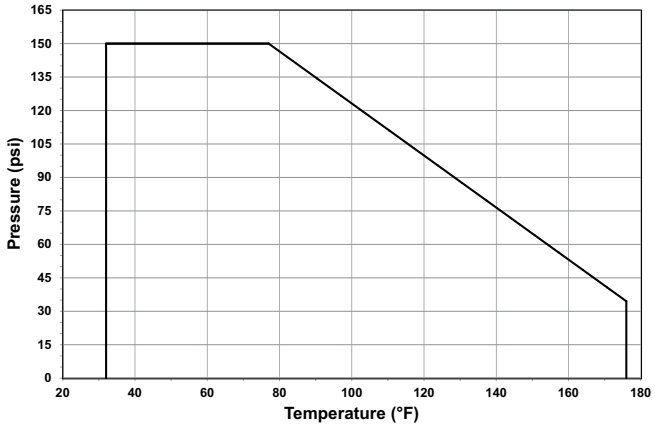

PP

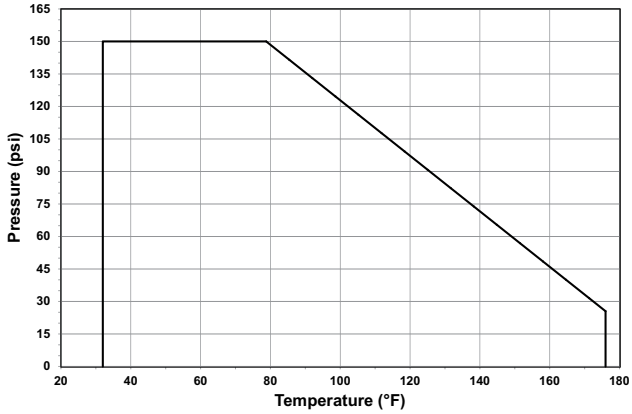

ABS

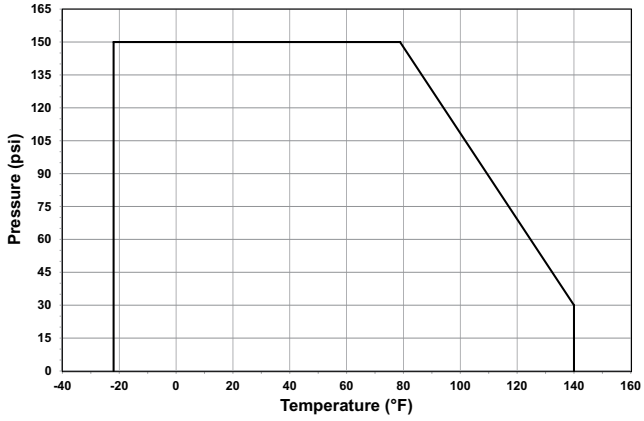

PVDF

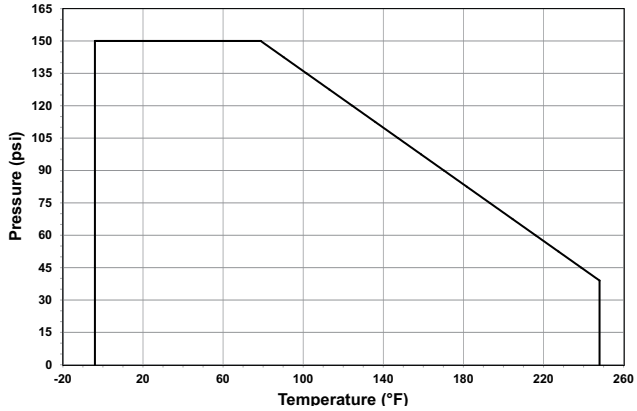

Pressure-Temperature

Material	Temperature Range (°F)	Max Pressure (psi)
PVC	32 to 140	150
CPVC	32 to 176	150
PP	32 to 176	150
ABS	-40 to 140	150
PVDF	-4 to 284	150

Vacuum Service

The Type 230-233 is rated for full vacuum service. Maximum differential pressure of 15psi at 122°F.

Dimensions

The following tables are shown in millimeters unless otherwise specified

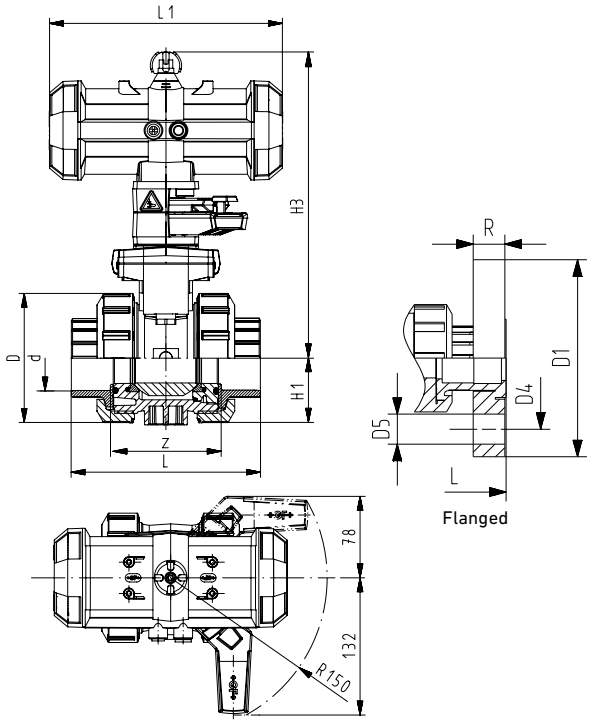

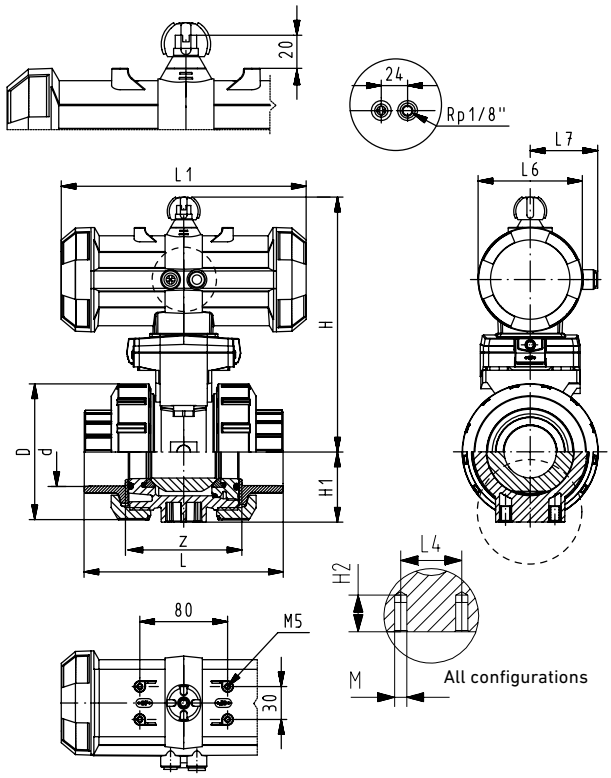

All Materials

Size (inch)	d (mm)	D	H	H1	H2	H3	L1 (SR/DA)	L4	L6 (SR/DA)*	L7 (SR/DA)*	M
⅜	16	50	167	27	12	230	194	25	76	48	M6
½	20	50	167	27	12	230	194	25	76	48	M6
¾	25	58	176	30	12	239	194	25	76	48	M6
1	32	68	176	36	12	239	194	25	76	48	M6
1¼	40	84	210	44	15	271	224	45	95	59	M8
1½	50	97	210	51	15	271	224	45	95	59	M8
2	63	124	232	64	15	293	224	45	95	59	M8
2½	75	166	262	85	15	-	276/326	70	65/72	32.5/36	M8
3	90	200	281	105	15	-	370/411	70	80/90	40/45	M8
4	110	238	238	123	22	-	370/411	120	80/90	40/45	M12

*SR=Spring return (Fail-open/fail-close) DA=double acting. If only one dimension is shown they are both the same.

PVC/CPVC

	IPS Socket		Threaded NPT		ANSI Flanged				
Size (inch)	L	z	L	z	L	D1 (inch)	D4 (inch)	D5 (inch)	R (inch)
⅜	105	67	98	69	-	-	-	-	-
½	105	61	98	65	149	3.5	2.38	0.63	0.57
¾	121	70	111	74	165	3.88	2.75	0.63	0.58
1	133	76	127	82	184	4.25	3.13	0.63	0.66
1¼	154	90	147	98	206	4.63	3.5	0.63	0.69
1½	164	94	157	110	221	5	3.88	0.63	0.76
2	183	107	183	135	251	6	4.75	0.63	0.82
2½	233	144	234	166	311	7	5.5	0.75	0.98
3	254	151	255	175	343	7.5	6	0.75	1.02
4	301	174	302	214	397	9	7.5	0.75	1.11

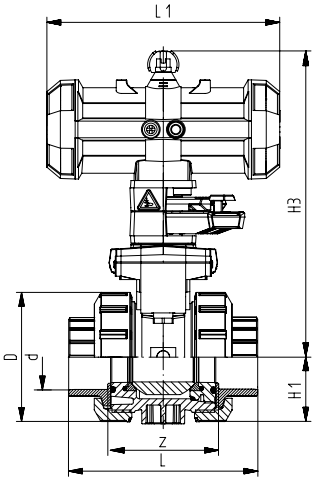

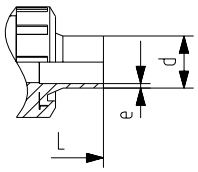

IR/butt fusion

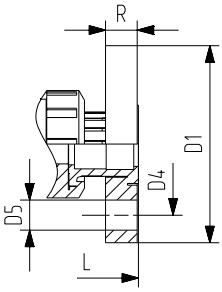

ABS

	Metric Socket	
d (mm)	L	z
16	92	64
20	95	64
25	110	72
32	123	79
40	146	94
50	157	95
63	183	107
75	233	144
90	254	151
110	301	174

PP

	Metric Socket		Metric IR/Butt		Threaded NPT		ANSI Flanged				
d (mm)	L	z	L	e	L	z	L	D1 (inch)	D4 (inch)	D5 (inch)	R (inch)
16	93	67	-	-	96	71	-	-	-	-	-
20	95	66	130	1.9	99	64	166	3.74	2.36	0.63	0.63
25	109	77	143	2.3	111	76	177	4.13	2.76	0.63	0.67
32	119	83	150	2.9	127	83	191	4.53	3.11	0.63	0.71
40	135	99	171	3.7	146	100	209	5.51	3.5	0.63	0.79
50	147	105	191	4.6	157	111	229	5.91	3.86	0.63	0.87
63	168	117	220	5.8	183	134	253	6.5	4.76	0.75	0.94
75	233	167	266	6.8	-	-	416	7.28	5.51	0.75	1.02
90	254	180	264	8.2	-	-	414	7.87	5.98	0.75	1.06
110	301	215	301	10.0	-	-	451	9.02	7.48	0.75	1.1

PVDF

	Metric Socket		Metric IR/Butt		Threaded NPT		ANSI Flanged				
d (mm)	L	z	L	e	L	z	L	D1 (inch)	D4 (inch)	D5 (inch)	R (inch)
16	93	67	-	-	96	69	-	-	-	-	-
20	95	66	130	1.9	99	64	174	3.74	2.36	0.63	0.63
25	109	77	143	1.9	111	76	189	4.13	2.76	0.63	0.67
32	119	83	150	2.4	127	83	199	4.53	3.11	0.63	0.71
40	135	99	171	2.4	146	101	235	5.51	3.5	0.63	0.79
50	147	105	191	3.0	157	111	243	5.91	3.86	0.63	0.87
63	168	117	220	3.0	183	135	261	6.5	4.76	0.75	0.94
75	233	167	266	3.6	-	-	426	7.28	5.51	0.75	1.02
90	254	180	264	4.3	-	-	426	7.87	5.98	0.75	1.06
110	301	215	301	5.3	-	-	487	9.02	7.48	0.75	1.1

Pneumatically Actuated 3-way Ball Valves

Type 285-288

General

- **Size**: ⅜"–2"
- **Material**: PVC, CPVC, PROGEF® Standard PP, ABS, SYGEF® Standard PVDF
- **Seat**: PTFE
- **Seals**: EPDM, FPM
- **End Connection**: Solvent cement socket, threaded, flanged, fusion spigot, fusion socket
- **Seat**: PTFE
- **Seals**: EPDM or FPM
- **Actuator Housing**: Glass-filled PP
- **Mounting**: Stainless steel threaded inserts (horizontal only)
- **Action**: Fail open, fail closed, and double acting
- **Position Indicator**: Optical, integrated

Key Valve Certifications

- **FDA CFR 21 177.1520**: PP and PVDF
- **FDA CFR 21 177.2600**: EPDM and FPM
- **FDA CFR 21 177.1550**: PTFE
- **ABS**: All materials

Sample Specification

The Type 285-288 3-way Ball Valve shall be available in horizontal and vertical body types. The ball shall be fully molded and full port with blocking capability when in the OFF position. The stem shall be blowout proof, utilizing a double o-ring seal and a predetermined break point opposite the media side of the stem seals. The seat carrier shall be adjustable and reverse threaded. The handle shall double as a seat carrier adjustment or removal tool. Horizontal versions shall utilize a true union connection with a seat carrier on all three ports. Vertical versions shall utilize a true union connection and seat on the two main ports only. The branch connection on vertical versions shall be metric spigot and a metric-ASTM coupling shall be provided. The valve nut threads shall be of buttress type. Ball seats shall have an elastomeric backing o-ring and all elastomeric seals shall be of like material. All valves shall be tested in accordance to ISO9393 and designed to ISO16135 standards. All valves shall be manufactured under ISO9001 for Quality and ISO14001 for Environmental Management. Following assembly, every valve shall be certified bubble tight.

Material Specification

PVC valves shall meet ASTM D1784 cell classification 12454 standards. CPVC valves shall meet ASTM D1784 cell classification 23447-B standards. PP valves shall meet ASTM D5847-14 cell classification PP0510B66851 standards. ABS valves shall meet ASTM D3965 cell classification 42222 standards. PVDF valves shall be type 1, grade 2 according to ASTM D3222 standards. Valves of all materials shall be RoHS compliant.

Definition of Valve Style

Horizontal

Vertical

Definition of Valve Type

- **Type 285:** PVC/CPVC/ABS horizontal
- **Type 286:** PP horizontal
- **Type 287:** PVDF horizontal
- **Type 288:** PVC/ABS vertical

Material Availability

Material	Horizontal	Vertical
PVC	All Sizes	All Sizes
CPVC	All Sizes	-
PP	All Sizes	-
ABS	All Sizes	All Sizes
PVDF	All Sizes	-

Actuator Type by Valve Size

	⅜" - 1"	1¼" - 2"
Fail-safe Close (FC)	PA 11	PA 21
Fail-safe Open (FO)	PA 11	PA 21
Double Acting (DA)	PA 11	PA 21

Optional Features

- **Pilot Valve**: 24VAC/DC, 110VAC, 230VAC
- **Positioner**: Digital electro-pneumatic
- **Limit Switches**: Mechanical, inductive
- **Actuator Housing**: Alternative materials available upon request
- **Stroke Limiter**: 45°
- **Manual Loading Station**: Local control box
- **Seals**: Alternative materials available upon request
- **Seat**: PVDF
- **End Connection**: Alternatives available upon request
- **Cleaned**: Silicone free/oil free

Components

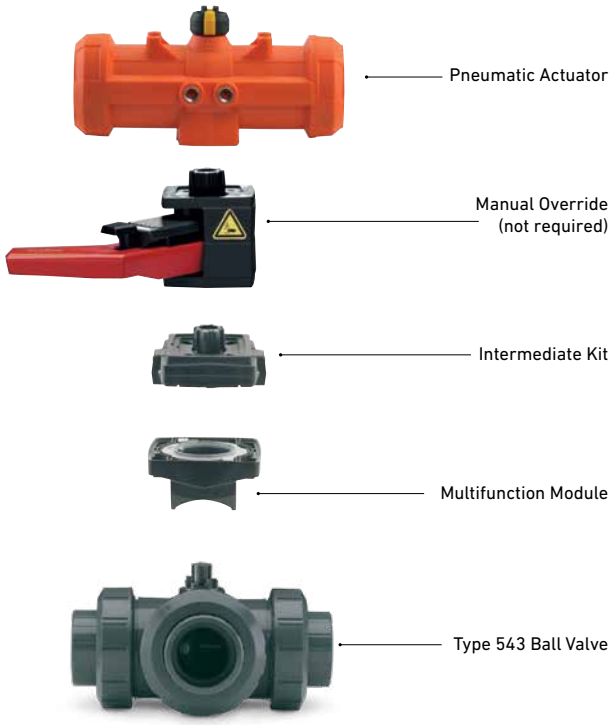

Actuator Technical Data

	PA 11/21
Control Media	Neutral, non aggressive gases (max. 104°F)
Operating Pressure	60 psi
Max. Allowable Operating Pressure	100 psi
Pneumatic Connection	⅛" BSP (NPT adapter supplied with assemblies)
Cycle Time	1-2 seconds
Actuation Angle	90°
Action	Fail-safe close (FC)
	Fail-safe open (FO)
	Double acting (DA)
Operating Temperature	14°F - 122°F
Permissible Humidity	0-100%
Position Indicator	Visual
Housing Material	PP-glass filled

Technical Data

Pressure Temperature Curves

The following graphs are based on a 25 year lifetime water or similar media application

PVC

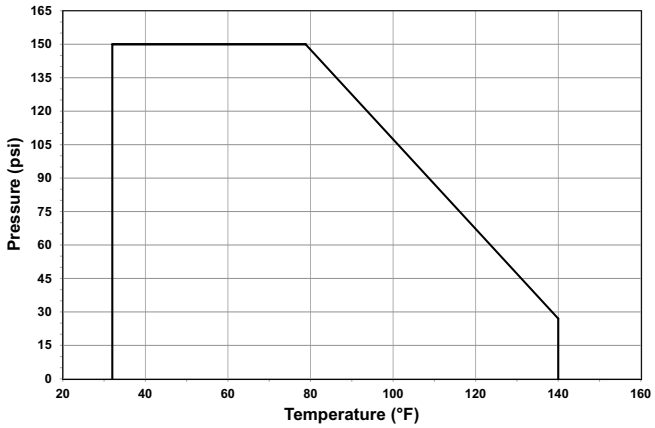

CPVC

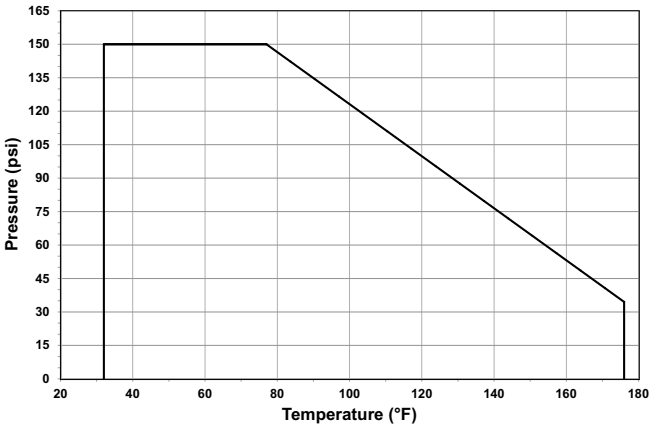

PP

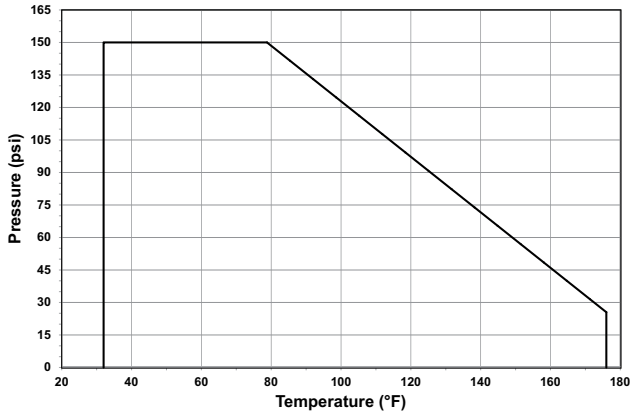

ABS

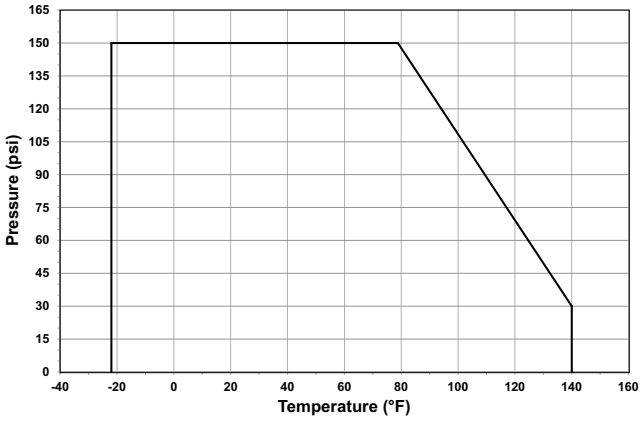

PVDF

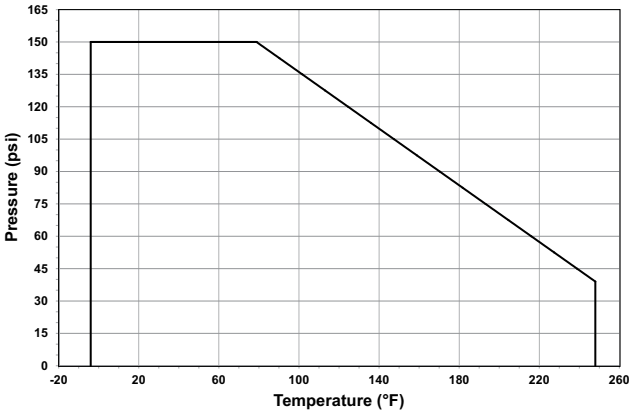

Pressure-Temperature

Material	Temperature Range (°F)	Max Pressure (psi)
PVC	32 to 140	150
CPVC	32 to 176	150
PP	32 to 176	150
ABS	-40 to 140	150
PVDF	-4 to 284	150

Vacuum Service

The Type 285-288 is rated for full vacuum service. Maximum differential pressure of 15psi at 122°F.

Flow

Porting options shown turning the valve rotating clockwise. Redundant and intermediate positions not shown.

Vertical Diverter

0°

90°

Horizontal L-port

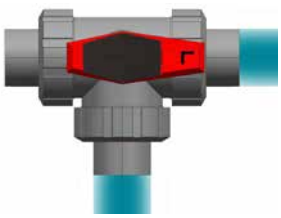

0°

90°

Horizontal T-port

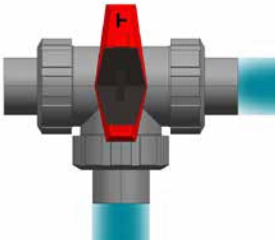

0°

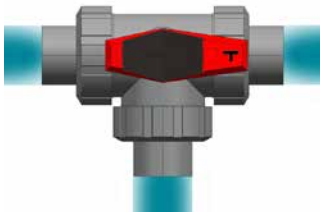

90°

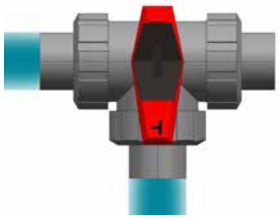

180°

270°

Vertical Diverter: Cv Value (gal/min)

Size (inch)	d (mm)	A-C or B-C
⅜	16	3.5
½	20	5.3
¾	25	10.5
1	32	19.6
1¼	40	33.6
1½	50	43.4
2	63	86.1

Horizontal L-port: Cv Value (gal/min)

Size (inch)	d (mm)	A-B	C-B or C-A	B-C or A-C
⅜	16	0.7	3.5	3.5
½	20	1.1	4.5	4.5
¾	25	2.1	10.5	10.5
1	32	3.5	19.6	19.6
1¼	40	6.3	33.6	33.6
1½	50	7.7	43.4	43.4
2	63	15.4	86.1	86.1

Horizontal T-port: Cv Value (gal/min)

Size (inch)	d (mm)	A-B	C-B or C-A	B-C or A-C
⅜	16	9.8	2.5	2.8
½	20	14	3.5	4.9
¾	25	32.9	9.1	10.5
1	32	55.5	14	17.5
1¼	40	90.3	26.6	32.9
1½	50	133.7	32.9	42
2	63	217	62.3	84.7

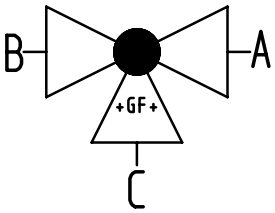

Spring Return Actuator Selection

Base Valve Type	Energized Position	Fail Position	Actuator Action	Build Type*
Vertical Diverter	0° (A-C)	90° (B-C)	FC	Standard build
Vertical Diverter	90° (B-C)	0° (A-C)	FO	Standard build
Horizontal L-port	0° (A-C)	90° (B-C)	FC	Standard build
Horizontal L-port	90° (B-C)	0° (A-C)	FO	Standard build
Horizontal T-port	0° (A-C)	90° (A-B-C)	FC	Custom
Horizontal T-port	90° (A-B-C)	0° (A-C)	FO	Custom
Horizontal T-port	90° (A-B-C)	180° (B-C)	FC	Standard build
Horizontal T-port	180° (B-C)	90° (A-B-C)	FO	Standard build
Horizontal T-port	180° (B-C)	270° (A-B)	FC	Custom
Horizontal T-port	270° (A-B)	180° (B-C)	FO	Custom
Horizontal T-port	270° (A-B)	0° (B-C)	FC	Custom
Horizontal T-port	0° (B-C)	270° (A-B)	FO	Custom

*Standard build defined as the porting configuration achieved per the standard assembly procedure utilizing either the FO or FC actuator as called out above. All custom assemblies require the manipulation of assembly subcomponents.

Dimensions

The following tables are shown in millimeters unless otherwise specified

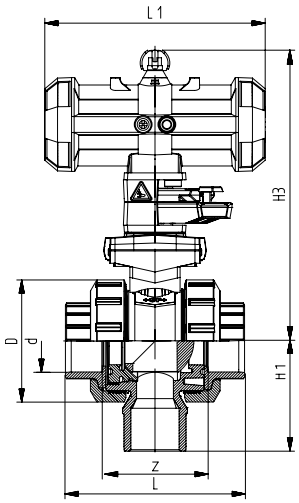

Socket/Threaded w/ MO

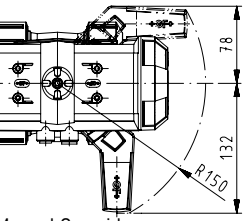

Manual Override

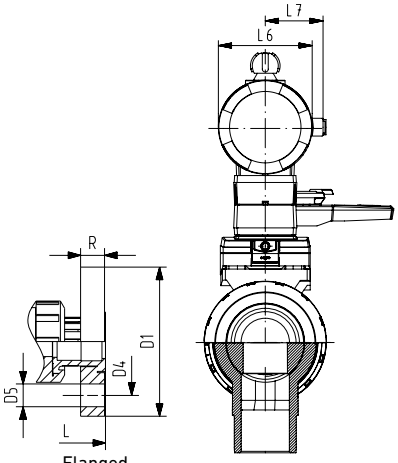

Flanged

All configurations w/ MO

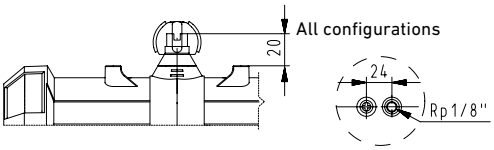

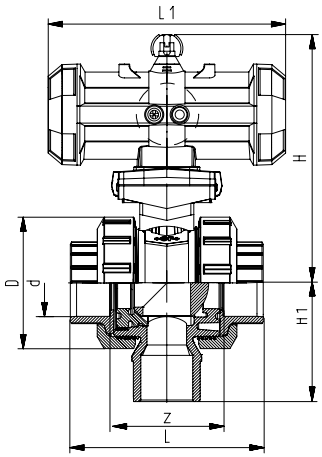

Socket/Threaded w/o MO

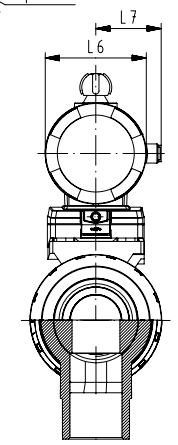

All configurations w/o MO

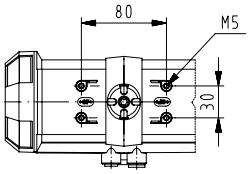

Actuator Top Mount

Type 288: All Materials

Size (inch)	d (mm)	D	H	H1	H3	L1	L6	L7
⅜	16	50	159	62	230	194	76	48
½	20	50	159	62	230	194	76	48
¾	25	58	168	72	239	194	76	48
1	32	68	168	77	239	194	76	48
1¼	40	84	203	87	271	224	95	59
1½	50	97	203	97	271	224	95	59
2	63	124	225	112	293	224	95	59

Type 288: PVC

	IPS Socket		Threaded NPT	
Size (inch)	L	z	L	z
⅜	106	67	98	70
½	105	61	98	64
¾	121	70	112	76
1	133	76	127	83
1¼	152	90	146	99
1½	165	94	157	111
2	183	107	183	135

Type 288: ABS

	Metric Socket	
d (mm)	L	z
16	92	64
20	95	64
25	111	74
32	123	79
40	146	95
50	157	95
63	183	107

Type 288: PVC

	ANSI Flanged				
Size (inch)	L	D1 (inch)	D4 (inch)	D5 (inch)	R (inch)
½	149	3.5	2.38	0.56	0.57
¾	165	3.88	2.75	0.63	0.58
1	184	4.25	3.13	0.63	0.66
1¼	206	4.63	3.5	0.56	0.69
1½	221	5	3.88	0.56	0.76
2	251	6	4.75	0.75	0.82

Dimensions

The following tables are shown in millimeters unless otherwise specified

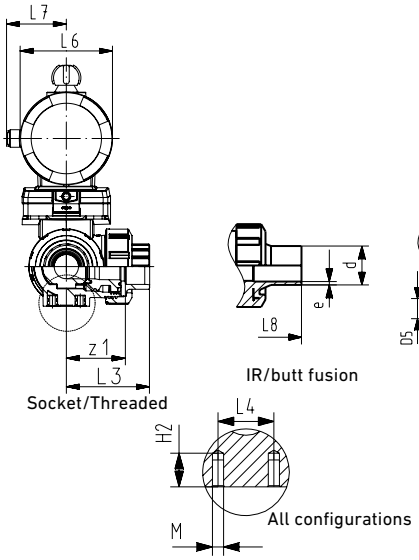

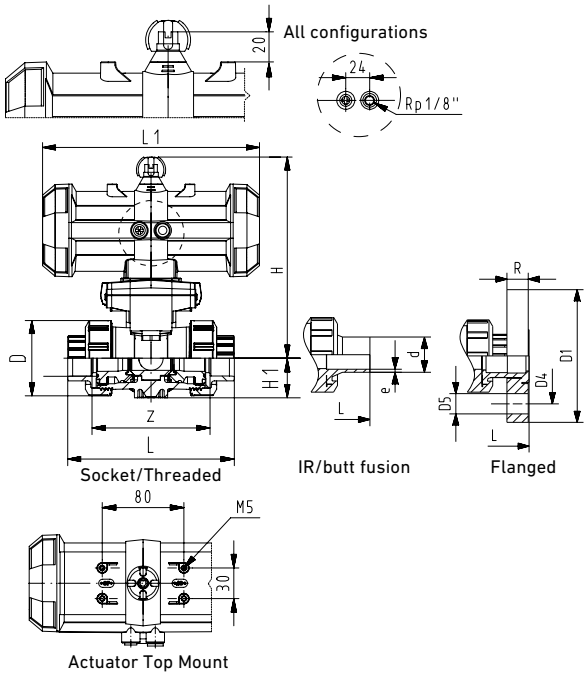

Type 285-287: All Materials

Size (inch)	d (mm)	D	H	H1	H2	L1	L4	L6	L7	M
⅜	16	50	167	27	62	194	25	76	48	M6
½	20	50	167	27	62	194	25	76	48	M6
¾	25	58	176	30	71	194	25	76	48	M6
1	32	68	176	36	71	194	25	76	48	M6
1¼	40	84	210	44	84	224	45	95	59	M8
1½	50	97	210	51	84	224	45	95	59	M8
2	63	124	232	64	106	224	45	95	59	M8

Type 285: ABS

d	Metric Socket			
(mm)	L	L8	z	z1
16	108	54	81	40
20	112	56	81	40
25	129	65	94	47
32	151	75	107	54
40	181	90	130	65
50	205	103	143	72
63	261	130	185	92

Type 285: PVC/CPVC

	IPS Socket				Threaded NPT				Flanged					
Size (inch)	L	L8	z	z1	L	L8	z	z1	L	L1	D1 (inch)	D4 (inch)	D5 (inch)	R (inch)
⅜	123	61	85	42	115	57	87	43	-	-	-	-	-	-
½	122	61	77	38	114	57	81	40	161	80	3.5	2.38	0.56	0.57
¾	141	71	92	46	131	66	96	48	182	91	3.88	2.75	0.63	0.58
1	161	81	105	53	155	78	111	56	208	104	4.25	3.13	0.63	0.66
1¼	187	93	126	63	181	90	134	67	238	119	4.63	3.5	0.56	0.69
1½	213	107	143	72	205	103	159	80	265	133	5	3.88	0.56	0.76
2	261	130	185	92	261	130	213	106	323	161	6	4.75	0.75	0.82

Type 286-287: PP/PVDF

	Metric Socket				Metric IR/Butt				Threaded NPT			
d (mm)	L	L8	z	z1	L	L8	e (PP)	e (PVDF)	L	L8	z	z1
16	110	55	82	41	-	-	-	-	112	56	86	43
20	112	56	82	41	146	73	1.9	1.9	114	57	80	40
25	129	65	97	49	163	82	2.3	1.9	131	66	95	48
32	146	73	110	55	178	89	2.9	2.4	154	77	110	55
40	170	85	132	66	204	102	3.7	2.4	180	90	132	66
50	193	98	151	76	237	120	4.6	3.0	203	103	157	79
63	244	123	188	94	296	149	5.8	3.0	258	130	210	105

Pneumatic Actuator
PA11/21

General

- **Actuator Housing:** Glass-filled PP
- **Control Media:** Compressed air
- **Pneumatic Connection:** G1/8"
- **Cycle Time:** 1-2 sec
- **Stroke**: 90 degrees
- **Action:** FC, FO, DA
- **Max DA Control Pressure:** 101psi
- **Max FC/FO Control Pressure:** 65psi
- **Position Indicator:** Optical, integrated
- **Top Mount:** NAMUR compliant
- **Base Mount:** ISO 5211 compliant
- **Stroke Limiter:** Optional, 45 degrees

Sample Specification

The PA11 and PA21 Pneumatic Actuators shall be of rack and pinion design with options for fail-safe to close, fail-safe to open and double acting functionalities. The outer housing material of construction shall be glass-filled polypropylene. Actuator end caps shall be threaded over the actuator housing to create a pressure tight seal and secure any spring packs. The actuator top mount shall be NAMUR compliant and feature an optical position indicator with field adjustable tabs with four insert positions stationed 90 degrees apart. The pneumatic connection ports shall be threaded BSP and fail-safe variants shall utilize a pneumatic exhaust port insert. The actuator base mount shall be of standard F0 pattern per DIN ISO 5211 and the drive shall be a Georg Fischer specific spline pattern with options to adapt to standard metric square or double square stem designs. All actuators shall be manufactured under ISO9001 for Quality and ISO14001 for Environmental Management.

Components

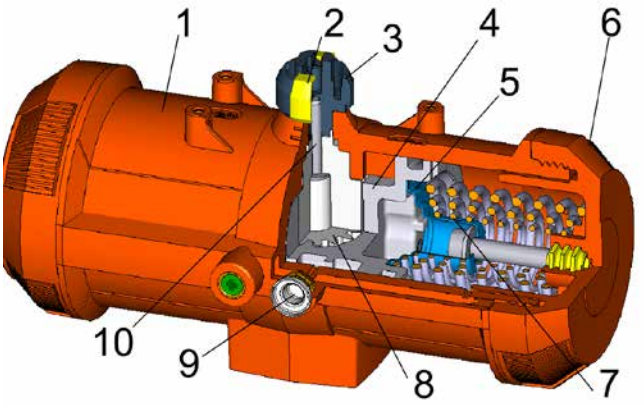

Components

Part	Description	Material
1	Actuator housing	Glass-filled PP
2	Position indicator clip	Reinforced thermoplastic
3	Position indicator	Reinforced thermoplastic
4	Rack	Reinforced thermoplastic
5	Spring pack cover	Zinc plated steel
6	Actuator end cap	Glass-filled PP
7	Spring pack	Spring steel
8	Pinion	Reinforced thermoplastic
9	Pneumatic connection	Stainless steel
10	Pinion shaft	Reinforced thermoplastic

Optional Feature

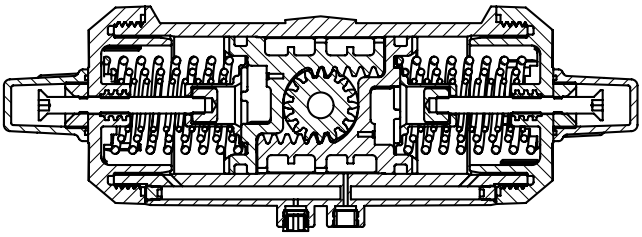

Fail-safe Close Option Shown

Stroke Limiter

Both the PA11 and PA21 Pneumatic Actuators are available with stroke limiters in fail-safe to close, fail-safe to open and double acting functionalities. The stroke can be limited up to a maximum of 45 degrees but cannot be extended to positions greater than 90 degrees. PA11 and PA21 Actuators with stroke limiters feature an adjustment screw on either side of the actuator for open/close limitation with a jam nut to secure the adjustment screw and threaded covers.

Actuator Technical Data

	PA 11/21
Actuator Style	Rack and pinion
Control Media	Neutral, non aggressive gases (max. 104°F)
Max. Allowable Control Pressure	100 psi
Pneumatic Connection	⅛" BSP (NPT adapter supplied)
Cycle Time	1-2 seconds
Actuation Angle	90°
Action	Fail-safe close (FC)
	Fail-safe open (FO)
	Double acting (DA)
Operating Temperature	14°F - 122°F
Permissible Humidity	0-100%
Position Indicator	Visual
Housing Material	PP-glass filled

Technical Data

Torque Specification

PA11

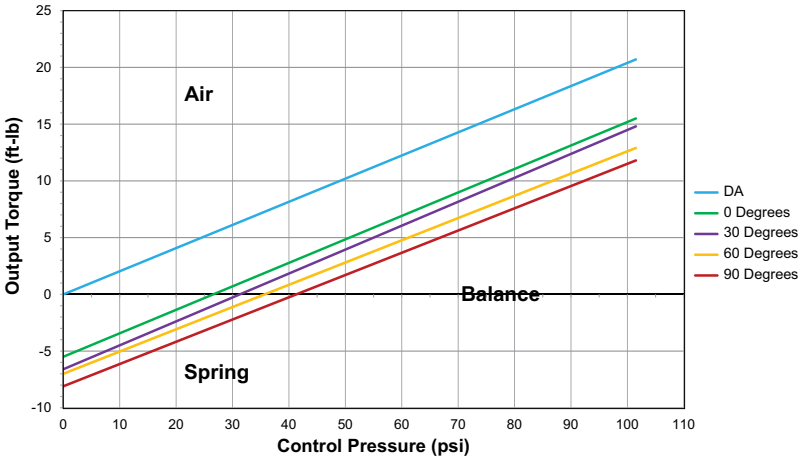

PA21

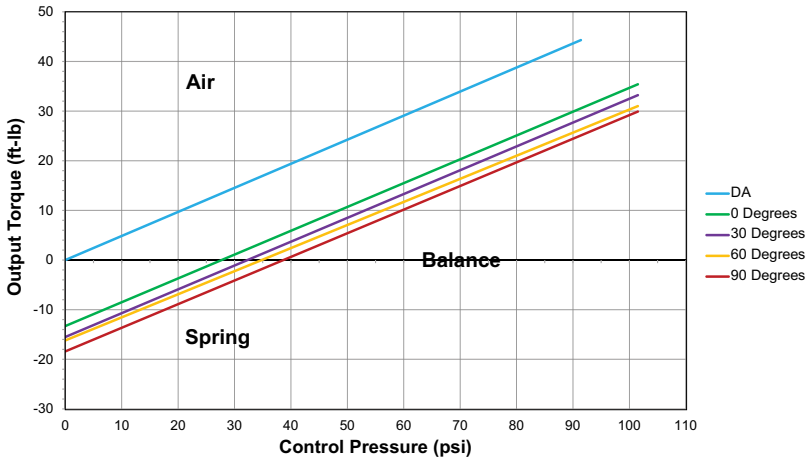

Control Volume

Type	Action	Rotation	Volume (dm³)
PA11	FC	Open	0.15
	FO	Close	0.15
	DA	Open	0.18
	DA	Close	0.15
PA21	FC	Open	0.28
	FO	Close	0.28
	DA	Open	0.35
	DA	Close	0.28

Control Diagrams

Red arrow indicating rotation direction when actuated. Spring return versions shown in fail position. Double acting version shown in closed position. Actuator top view shown.

Fail-safe Close: 3/2 Solenoid

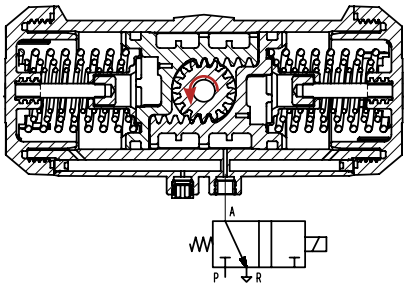

Fail-safe Open: 3/2 Solenoid

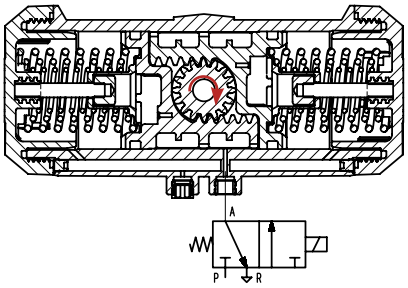

Double Acting: 4/2 Solenoid

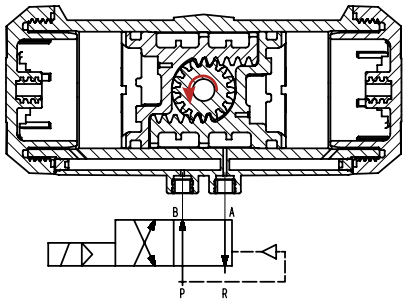

Double Acting: 5/2 Solenoid

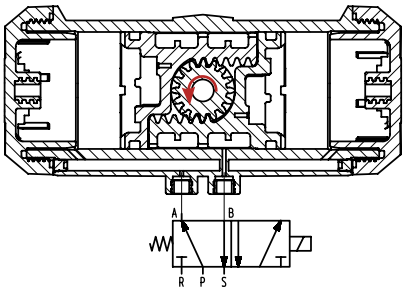

Dimensions

The following tables are shown in millimeters unless otherwise specified

PA11/21: Top Mount

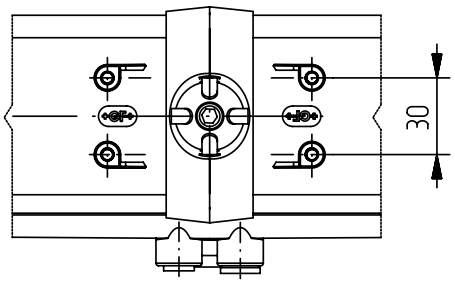

PA11/21: Base

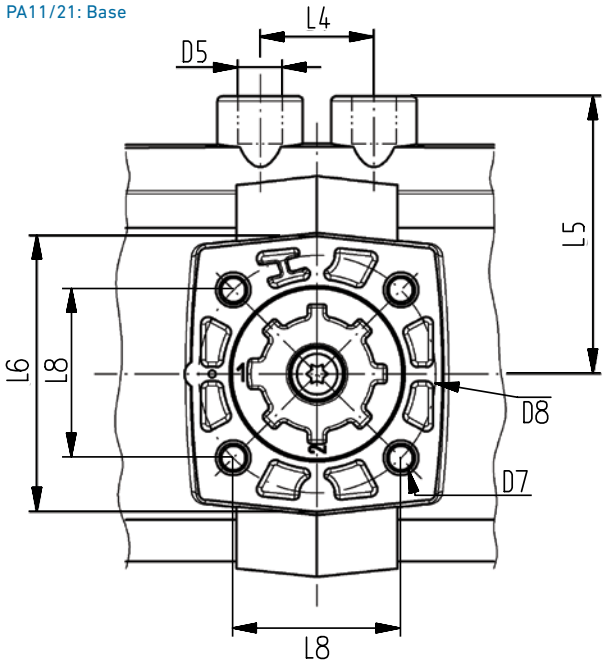

PA11/21: Front

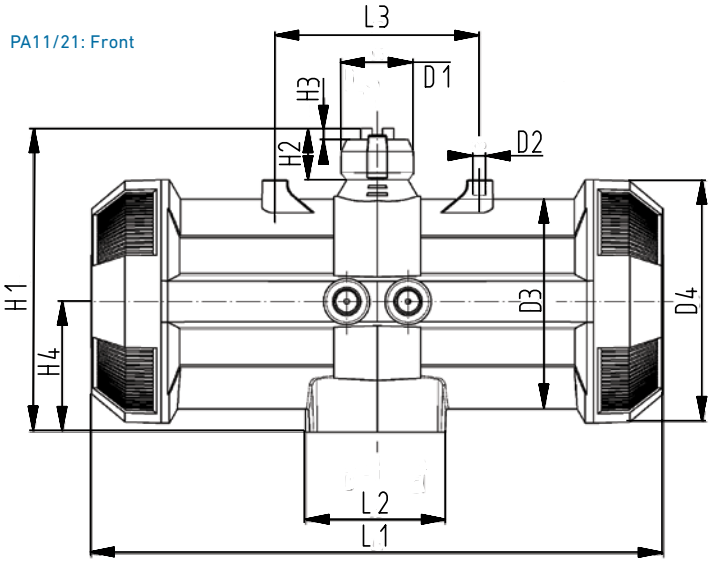

FC/FO/DA

Type	D1	D2	D3	D4	D5	D7	D8	H1	H2	H3	H4
PA11	29	M5	61	74	G⅛"	M5X12.5	42	97	20	4	40
PA21	29	M5	82	94	G⅛"	M6X12.5	50	119	20	4	51

FC/FO/DA

Type	L1	L2	L3	L4	L5	L6	L8
PA11	194	44	80	24	48	54	29.7
PA21	224	55	80	24	58.5	58	35.4

PA11/21 Optional Feature: Stroke Limiter

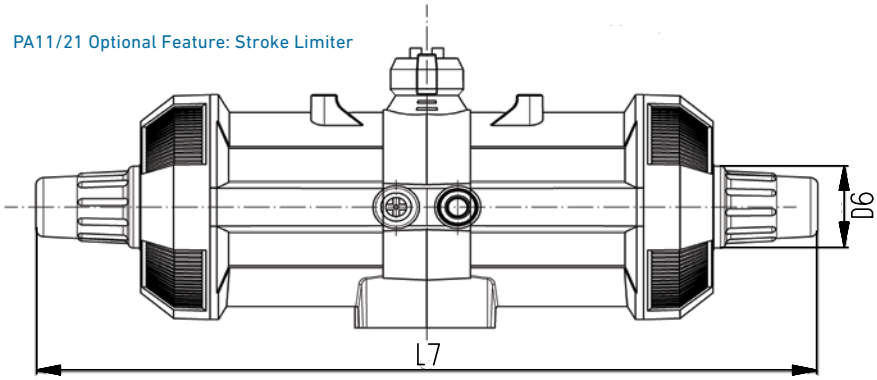

Stroke Limiter: FC/FO/DA

Type	D6	L7
PA11	35	275
PA21	35	305

Actuated Ball Valve
Manual Override

General

- **Size:** ⅜"-2"
- **Material**: PVC
- **Standard Accessory**: Some Type 230-233 valves
- **Actuation**: Electric or pneumatic
- **Mounting**: GF valves and actuators only
- **Standard Pack Quantity**: 1 piece

Sample Specification

GF's Actuated Ball Valve Manual Override shall be declutchable in design and utilized with a GF 5-Series Ball Valve. The operating stroke shall be 90 degrees. The drive connections shall be GF specific spline patterns. The lever shall re-engage the actuator if the actuator is fully cycled. The lever assembly shall rotate with the actuator. All manual overrides shall be manufactured under ISO9001 for Quality and ISO14001 for Environmental Management.

Ball Valve Compatibility

The *Type 230-233* Pneumatically Actuated Ball Valve and the *Type 288* Pneumatically Actuated Vertical 3-way Ball Valve families offer standard assemblies that include the declutchable manual override lever and one can be easily added to an existing assembly. *Type 104* and actuated *Type 523* Ball Valve assemblies are not compatible with the declutchable manual override lever. *Type 127* and *Type 179-184* Electrically Actuated Ball Valves sizes 1¼"-2" are compatible with a standard manual override lever of equal size but valves sizes ⅜"-1" require the manipulation of the manual override components by GF in order to make them compatible with the valve assembly. The porting configuration of any actuated horizontal 3-way ball valve needs to checked against the physical limitations of the manual override lever before assembly. The manual override lever is restricted to use in one specific 90° quadrant of a valve's full 360° potential stroke because of the connection design. All pneumatically actuated 3-way valves and electrically actuated 3-way valves sizes 1¼"-2" assembled in the defined "standard" porting configuration are compatible with the standard manual override lever. All other assemblies require the manipulation of the manual override components for compatibility; please check with GF for assembly suggestions.

Components

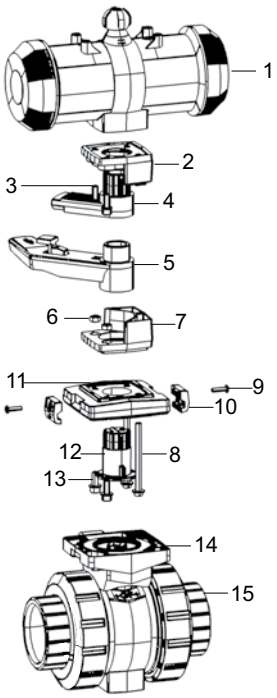

Assembly Components

Part	Description	Material
1	Actuator	Glass-filled PP
2	MO top mount	Glass-filled PP
3	MO short actuator bolt	304 Stainless steel
4	MO actuator engaged lever	PVC
5	MO valve declutchable lever	PVC
6	MO bottom mount nut	304 Stainless steel
7	MO bottom mount	Glass-filled PP
8	MO long actuator bolt	304 Stainless steel
9	Intermediate kit bracket bolt	304 Stainless steel
10	Intermediate kit bracket	Glass-filled PP
11	Intermediate kit base	Glass-filled PP
12	Intermediate kit drive bushing	Glass-filled PP
13	Intermediate kit bolt	304 Stainless steel
14	Multifunction module	Glass-filled PP
15	Type 546 Ball Valve	PVC, CPVC, PP, ABS, PVDF

Components 2-8 inclusive with manual override unit.

Function

The declutchable manual override utilizes two levers. One is permanently engaged with the actuator and the other is permanently engaged with the valve. When a manual override is required, the user can operate the valve with the declutchable lever regardless of the actuator's state.

If the manual override is left in the declutched state, the two levers will automatically reengage when the actuator is returned to the same relative position as the valve to reestablish the valve's actuated function.

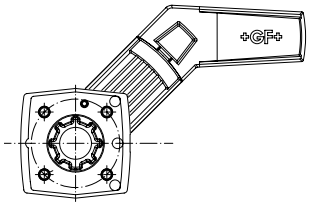

Engaged State

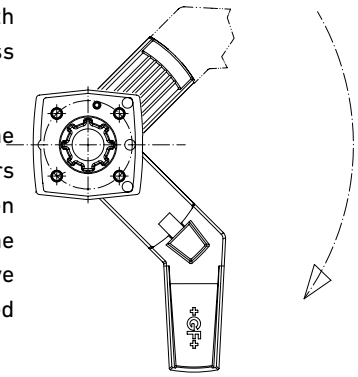

Declutched State

Pressing down on the declutch tab (shown at right) will disengage the two handles.

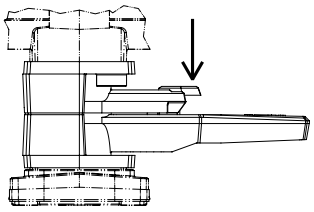

This decluchable manual override is ONLY compatible with GF valves and actuators. The spline connection to the actuator is designed to be used with PA11/21 pneumatic actuators and EA15/25 electric actuators. The base mount is not symmetric and can only be mounted to GF intermediate kits.

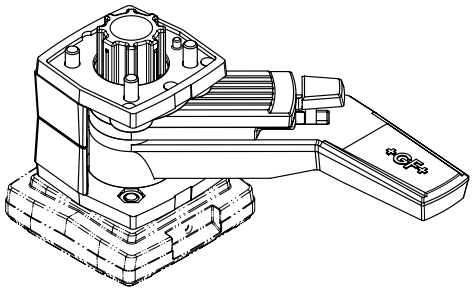

Dimensions

The following dimensions are shown in millimeters unless otherwise specified

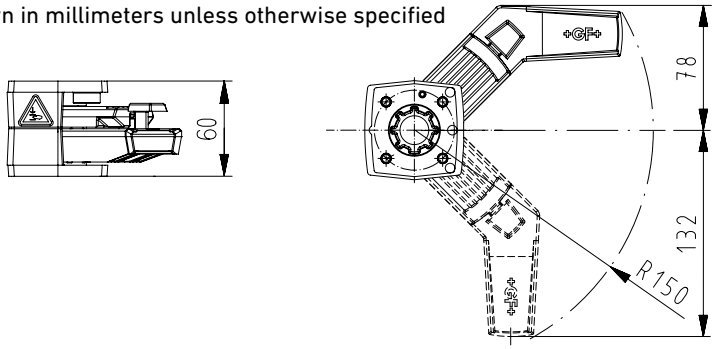

Pneumatically Actuated Wafer Style Butterfly Valve

Type 240

General

- **Size**: 2"–12"
- **Outer Body**: Glass-filled PP
- **Material**: PVC, CPVC, PROGEF® Standard PP, ABS, SYGEF® Standard PVDF
- **Seals**: EPDM, FPM, PTFE/FPM
- **Stem**: 316 stainless steel
- **Hardware**: 304 stainless steel
- **Actuator Housing**: Anodized Aluminum
- **Action**: FO,FC,DA
- **Connection**: Both ANSI 150 and DIN 2501
- **Stroke Limiter**: 10 degrees open/close
- **Standard Pack Quantity**: 1 valve

Sample Specification

The Type 240 Pneumatically Actuated Butterfly Valve shall be wafer style compatible with both ANSI B16.5 150 lb and DIN 2501 flange patterns. The disk operation shall utilize double eccentric design principles. The shaft shall be non-wetted by a bushing assembly with double O-ring seals and fixed at both ends. The face seal shall be a Q-ring compatible with flat and serrated flange adapters. The face, disk and shaft seals shall operate independently. The wetted body and disk shall be of like materials. Valves shall be rated for bidirectional use. The actuator housing material shall be annodized aluminum. The pneumatic connections and accessory console mounting pattern shall be NAMUR compliant. The end stops shall be mechanically adjustable by 10 degrees in the open and close positions. All valves shall be tested in accordance to ISO9393 and designed to ISO16136 standards. All valves shall be manufactured under ISO9001 for Quality and ISO14001 for Environmental Management. Following assembly, every valve shall be tested and certified bubble tight exceeding Class VI standards.

Material Specification

PVC valves shall meet ASTM D1784 cell classification 12454 standards. CPVC valves shall meet ASTM D1784 cell classification 23447-B standards. PP valves shall meet ASTM D5847-14 cell classification PP0510B66851 standards. ABS valves shall meet ASTM D3965 cell classification 42222 standards. PVDF valves shall be type 1, grade 2 according to ASTM D3222 standards. Valves of all materials shall be RoHS compliant.

Key Valve Certifications

- **NSF 61**: PVC and CPVC
- **FDA CFR 21 177.1520**: PP and PVDF
- **FDA CFR 21 177.2600**: EPDM and FPM
- **FDA CFR 21 177.1550**: PTFE
- **ABS**: All materials
- **USP Class VI (physiological non-toxic)**: EPDM, FPM, PTFE, PP and PVDF

Key Design Feature

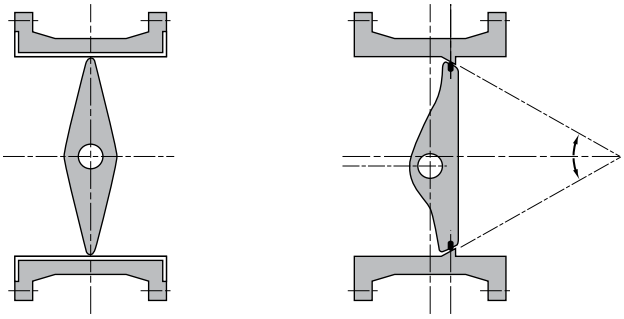

Centric

Double Eccentric

Components

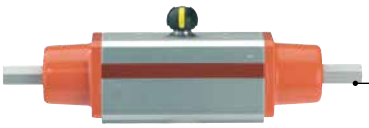

Pneumatic actuator

Intermediate Kit

Type 567 Butterfly Valve

Optional Features

- **Pilot Valve**: 24VAC/DC, 110VAC, 230VAC
- **Positioner**: Digital electro-pneumatic
- **Limit Switches**: Mechanical, inductive
- **Manual Loading Station**: Local control box
- **Manual Override**: Stainless steel
- **Stem Extension**: Two piece stainless steel
- **Shaft**: Titanium, Hastelloy-C
- **Hardware**: Alternatives available upon request
- **Cleaned**: Silicone free/oil free

Material Availability

It is not possible to use inner housings with disks of different material. Valves of all sizes and materials are available with both EPDM and FPM seals. Only CPVC, PP and PVDF valves are available with PTFE encapsulated FPM disc seals. GF does not offer disc seals that deviate from their standard product offering.

Double Eccentric Design Principle

The Type 240 PA Butterfly Valve is designed using the double eccentric disc principle. When opening and closing, the disc is not in contact with the seat, significantly reducing component wear. This design principle greatly reduces the operating torque and required elastomeric sealing material. The reduction in sealing material decreases the impact of elastomeric swelling. The benefits of double eccentric valves include a reduction in required actuator torque and extended valve lifetime.

Key Design Features

Type 567: Type 240 Base Valve

Seals

The Type 240 Butterfly Valve features a truly non-wetted shaft design. The shaft is sealed with a bushing assembly on either side of the disc. Each bushing utilizes a double o-ring seal totalling eight shaft seals in every valve.

Alternative o-ring shaft sealing designs are commonly found in competitive boot style thermoplastic butterfly valves. However, these solutions often rely upon elastomer on elastomer seals which can be unreliable, especially in chemical process applications or when working temperatures deviate from standard conditions. The Type 240 shaft seal design eliminates the need elastomer on elastomer seals, providing an industry tested dynamic double o-ring seal against a ridged thermoplastic surface.

The shaft, disc and face seals all operate independently from one another. This eliminates issues common to booted style centric valves such as crimping, where the compression of the valve between two flanges causes the boot to ripple. This can lead to increased operating torque and wear, ultimately reducing the useful life of the valve.

Actuator Technical Data

	PA 30-70
Control Medium	Neutral, non aggressive gases (max. 104°F)
Actuator Style	Scotch yoke
Max Allowable Control Pressure	100 psi
Pneumatic Connection	⅛" BSP (2"–8" FC/FO) ¼" BSP (10" and 12" FC/FO) ⅛" BSP (2"–12" DA) NPT adapter included with assembled valves
Cycle Time/90°	1–2 seconds
Operating Temperature	14°F-176°F
Actuation Angle	90°
Action	Fail-safe close (FC)
	Fail-safe open (FO)
	Double acting (DA)
Permissible Humidity	0–95%
Position Indicator	Visual
Housing Material	Anodized aluminium

Technical Data

Pressure-Temperature Curves

The following graphs are based on a lifetime of 25 years of water or similar media applications

PVC

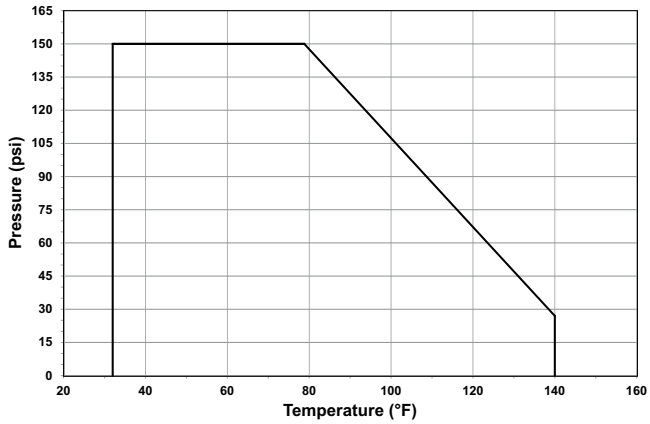

CPVC

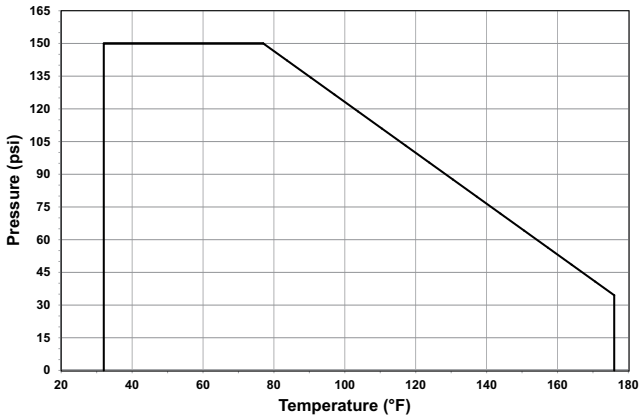

PP

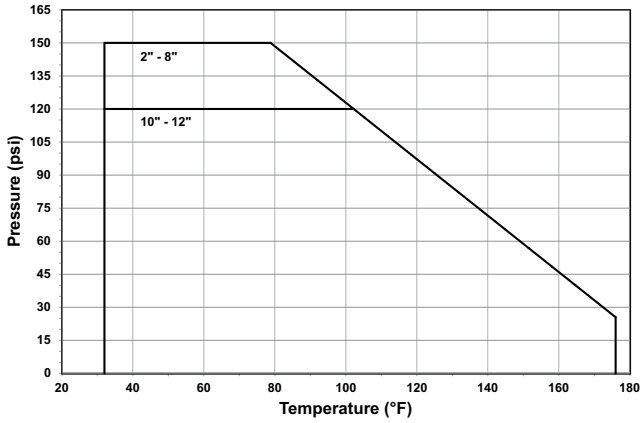

ABS

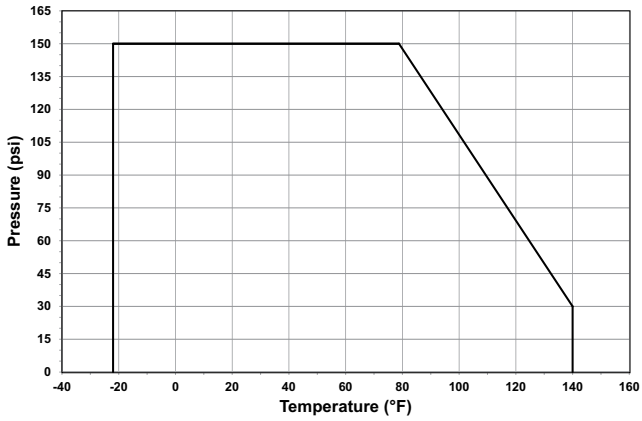

PVDF

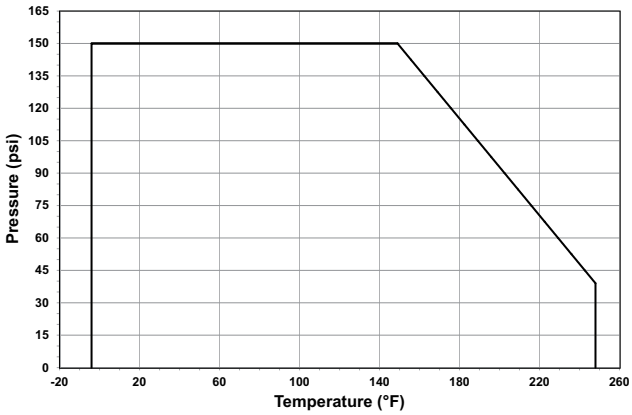

Pressure-Temperature

Material	Temperature Range (°F)	Max Pressure (psi)
PVC	32 to 140	150
CPVC	32 to 176	150
PP	32 to 176	150*
ABS	-40 to 140	150
PVDF	-4 to 284	150

*Dependant on size as shown in P-T curves

Vacuum Service

The Type 240 is rated for full vacuum service. Maximum differential pressure of 15psi at 122°F.

Flow

The following information is based on water applications at 68° F

Flow Characteristics

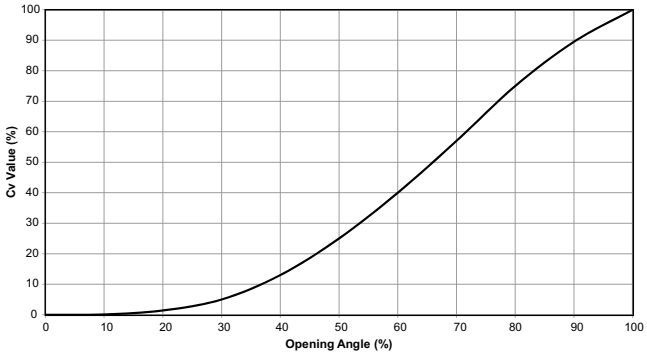

Cv Value

Size (inch)	d (mm)	Cv (gal/min)
2	63	103
2½	75	154
3	90	210
4	110	455
5	140	805
6	160	1162
8	225	2772
10	280	3570
12	315	5110

Dimensions

The following tables are shown in millimeters unless otherwise specified

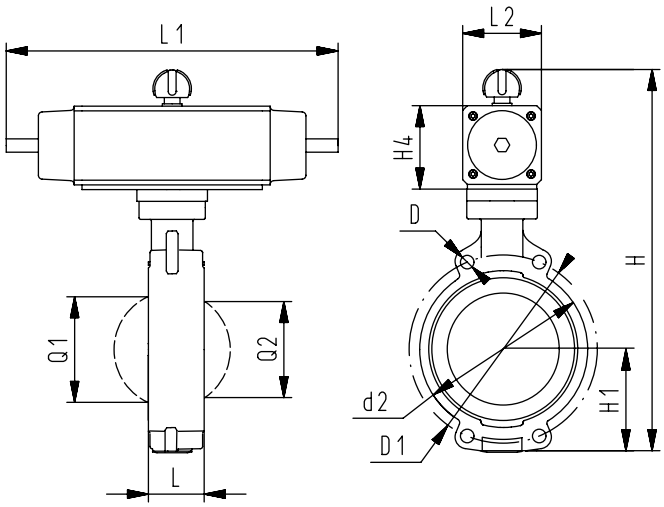

All Materials

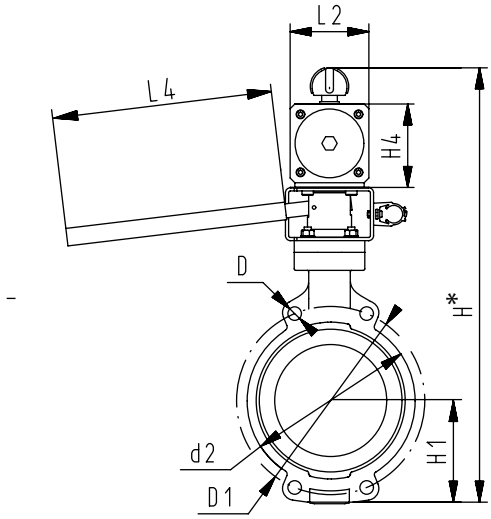

Optional Manual Override
All Materials 2"–8" (d63–d225)

All Materials

Size (inch)	d (mm)	d2	D	D1 min	D1 max	H	H*	H1	H4	L	L1	L2	L4	Q1	Q2
2	63	104	19	120	125	328	388	77	70	45	276	65	200	40	-
2½	75	115	19	140	145	340	400	83	70	46	276	65	200	54	35
3	90	131	19	150	160	361	421	89	78	49	326	72	200	67	50
4	110	161	19	175	191	402	462	104	86	56	370	80	250	88	74
5	140	187	23	210	216	441	501	117	96	64	411	90	250	113	97
6	160	215	24	241	241	471	531	130	106	72	423	100	250	139	123
8	225	267	23	290	295	530	590	158	118	73	452	112	250	178	169
10	280	329	25	353	362	660	-	205	148	113	648	137	-	210	207
12	315	379	25	400	432	715	-	228	157	113	663	145	-	256	253

H* including optional manual override

Dimensions

The following tables are shown in millimeters unless otherwise specified

Pneumatic Connection Detail

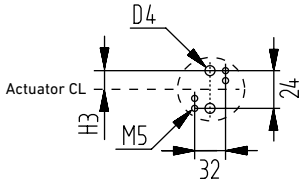

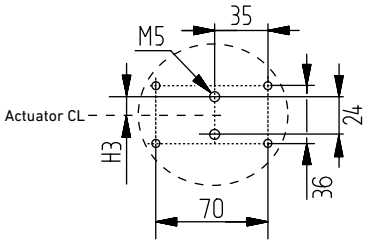

Actuator Front

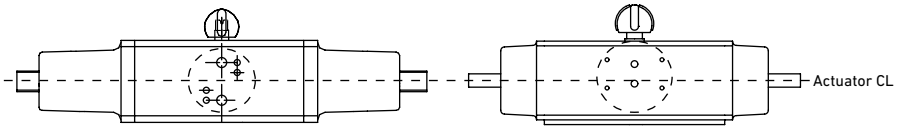

Actuator Top

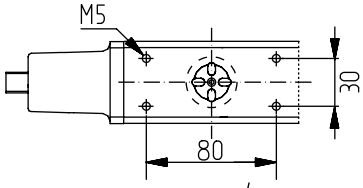

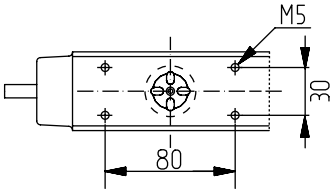

Position Indicator Top

Position Indicator Front

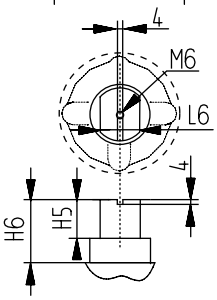

FC/FO: 10”/12” (d280/d315)
DA: 12” (d315)

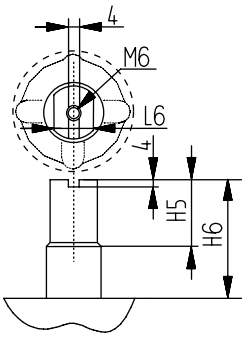

All Other Configurations

All Materials

Size (inch)	d (mm)	Size	Action	D4	H3	H5	H6	L6
2	63	PA30	FC/FO	G⅛”	17.9	13	20	10
2½	75	PA30	FC/FO	G⅛”	17.9	13	20	10
3	90	PA35	FC/FO	G⅛”	17.9	13	20	12
4	110	PA40	FC/FO	G⅛”	21	13	30	12
5	140	PA45	FC/FO	G⅛”	21	16	30	15
6	160	PA50	FC/FO	G⅛”	21	17	30	15
8	225	PA55	FC/FO	G⅛”	25	19	30	19
10	280	PA65	FC	G¼”	34	19.5	30	22
10	280	PA70	FO	G¼”	38	19.5	30	24
12	315	PA70	FC/FO	G¼”	43	19.5	30	24
2	63	PA35	DA	G⅛”	12.5	13	20	10
2½	75	PA35	DA	G⅛”	12.5	13	20	10
3	90	PA40	DA	G⅛”	17.9	13	20	10
4	110	PA45	DA	G⅛”	17.9	13	20	12
5	140	PA45	DA	G⅛”	17.9	13	20	12
6	160	PA55	DA	G⅛”	21	16	30	15
8	225	PA55	DA	G⅛”	21	16	30	15
10	280	PA65	DA	G⅛”	25	19	30	19
12	315	PA70	DA	G¼”	26	19	30	19

Pneumatically Actuated Lug Style Butterfly Valve

Type 244

General

- **Size**: 2"–12"
- **Outer Body**: Glass-filled PP
- **Material**: PVC, CPVC, PROGEF® Standard PP, ABS, SYGEF® Standard PVDF
- **Seals**: EPDM, FPM, PTFE/FPM
- **Stem**: 316 stainless steel
- **Lugs**: Overmolded 316 stainless steel
- **Actuator Housing**: Anodized Aluminum
- **Action**: FO,FC,DA
- **Connection**: ANSI 150
- **Stroke Limiter**: 10 degrees open/close
- **Standard Pack Quantity**: 1 valve

Sample Specification

The Type 244 Pneumatically Actuated Butterfly Valve shall be lug style compatible with ANSI B16.5 150 lb flange patterns. The disk operation shall utilize double eccentric design principles. The shaft shall be non-wetted by a bushing assembly with double O-ring seals and fixed at both ends. The face seal shall be a Q-ring compatible with flat and serrated flange adapters. The face, disk and shaft seals shall operate independently. The wetted body and disk shall be of like materials. Valves shall be rated for bidirectional use. The actuator housing material shall be anodized aluminum. The pneumatic connections and accessory console mounting pattern shall be NAMUR compliant. The end stops shall be mechanically adjustable by 10 degrees in the open and close positions. All valves shall be tested in accordance to ISO9393 and designed to ISO16136 standards. All valves shall be manufactured under ISO9001 for Quality and ISO14001 for Environmental Management. Following assembly, every valve shall be tested and certified bubble tight exceeding Class VI standards.

Material Specification

PVC valves shall meet ASTM D1784 cell classification 12454 standards. CPVC valves shall meet ASTM D1784 cell classification 23447-B standards. PP valves shall meet ASTM D5847-14 cell classification PP0510B66851 standards. ABS valves shall meet ASTM D3965 cell classification 42222 standards. PVDF valves shall be type 1, grade 2 according to ASTM D3222 standards. Valves of all materials shall be RoHS compliant.

Key Valve Certifications

- **NSF 61**: PVC and CPVC
- **FDA CFR 21 177.1520**: PP and PVDF
- **FDA CFR 21 177.2600**: EPDM and FPM
- **FDA CFR 21 177.1550**: PTFE
- **ABS**: All materials
- **USP Class VI (physiological non-toxic)**: EPDM, FPM, PTFE, PP and PVDF

Key Design Feature

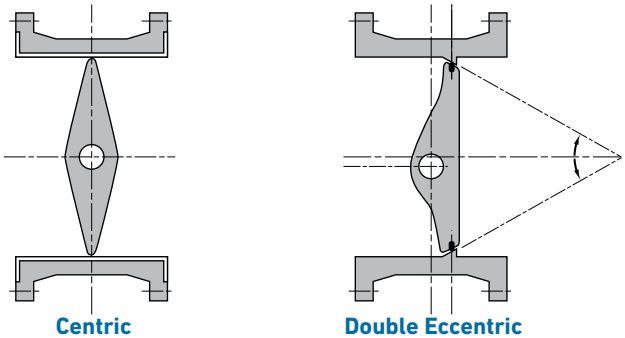

Centric Double Eccentric

Components

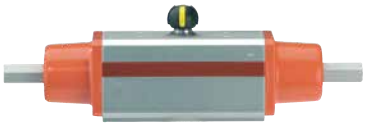

Pneumatic Actuator

Intermediate Kit

Type 578 Butterfly Valve

Optional Features

- **Pilot Valve**: 24VAC/DC, 110VAC, 2303VAC
- **Positioner**: Digital electro-pneumatic
- **Limit Switches**: Mechanical, inductive
- **Manual Loading Station**: Local control box
- **Manual Override**: Stainless steel
- **Stem Extension**: Two piece stainless steel
- **Shaft**: Titanium, Hastelloy-C
- **Hardware**: Alternatives available upon request
- **Cleaned**: Silicone free/oil free

Material Availability

It is not possible to use inner housings with disks of different material. Valves of all sizes and materials are available with both EPDM and FPM seals. Only CPVC, PP and PVDF valves are available with PTFE encapsulated FPM disc seals. GF does not offer disc seals that deviate from their standard product offering.

Double Eccentric Design Principle

The Type 244 PA Butterfly Valve is designed using the double eccentric disc principle. When opening and closing, the disc is not in contact with the seat, significantly reducing component wear. This design principle greatly reduces the operating torque and required elastomeric sealing material. The reduction in sealing material decreases the impact of elastomeric swelling. The benefits of double eccentric valves include a reduction in required actuator torque and extended valve lifetime.

Key Design Feature

PTFE Disc Seal

The Type 244 Butterfly Valve is available with a PTFE encapsuled FPM disc seal. The FPM core provides flexibility to the PTFE shell and allows for a reliable seal. The double eccentric design limits the amount of PTFE required. The face and shaft seals are FPM blended with approximately 15% PTFE.

Actuator Technical Data

	PA 30-70
Control Medium	Neutral, non aggressive gases (max. 104°F)
Actuator Style	Scotch yoke
Max Allowable Control Pressure	100 psi
Pneumatic Connection	⅛" BSP (2"–8" FC/FO) ¼" BSP (10" and 12" FC/FO) ⅛" BSP (2"–12" DA) NPT adapter included with assembled valves
Cycle Time	1–2 seconds
Operating Temperature	14°F-176°F
Actuation Angle	90°
Action	Fail-safe close (FC)
	Fail-safe open (FO)
	Double acting (DA)
Permissible Humidity	0–95%
Position Indicator	Visual
Housing Material	Anodized aluminium

Key Design Feature

Seals

The Type 244 Butterfly Valve features a truly non-wetted shaft design. The shaft is sealed with a bushing assembly on either side of the disc. Each bushing utilizes a double o-ring seal totalling eight shaft seals in every valve.

Alternative o-ring shaft sealing designs are commonly found in competitive boot style thermoplastic butterfly valves. However, these solutions often rely upon elastomer on elastomer seals which can be unreliable, especially in chemical process applications or when working temperatures deviate from standard conditions. The Type 244 shaft seal design eliminates the need elastomer on elastomer seals, providing an industry tested dynamic double o-ring seal against a ridged thermoplastic surface.

The shaft, disc and face seals all operate independently from one another. This eliminates issues common to booted style centric valves such as crimping, where the compression of the valve between two flanges causes the boot to ripple. This can lead to increased operating torque and wear, ultimately reducing the useful life of the valve.

Technical Data

Pressure-Temperature Curves

The following graphs are based on a lifetime of 25 years of water or similar media applications

PVC

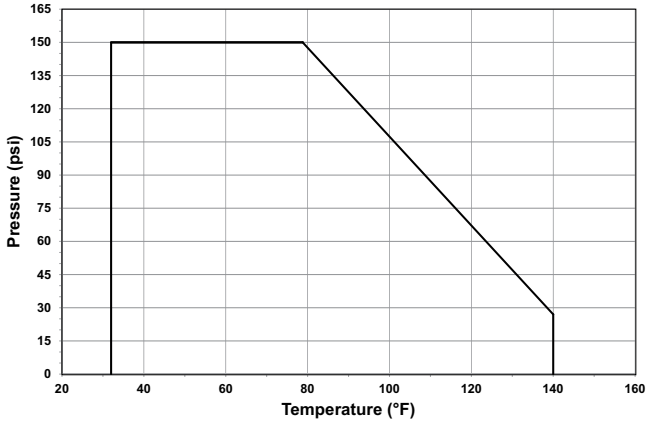

CPVC

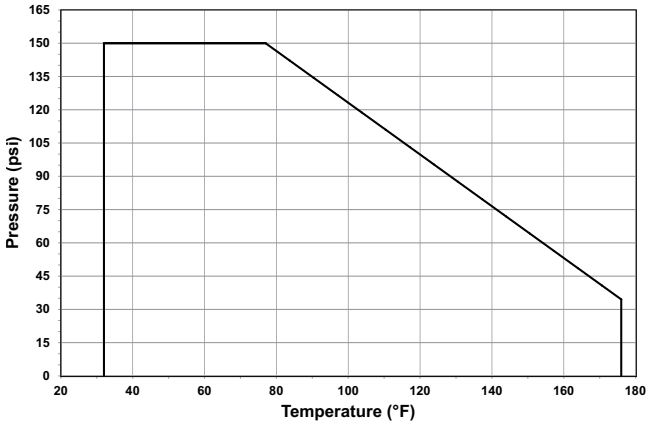

PP

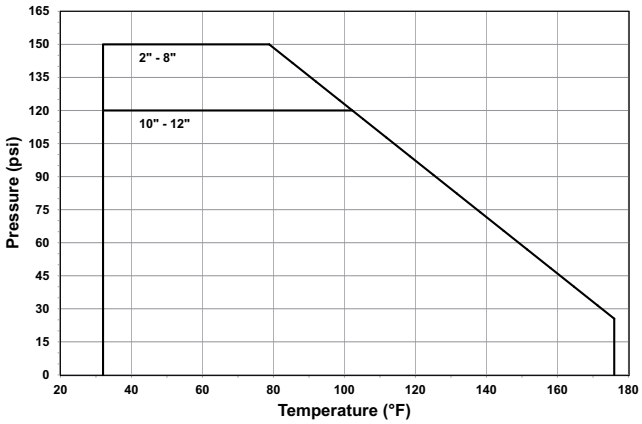

ABS

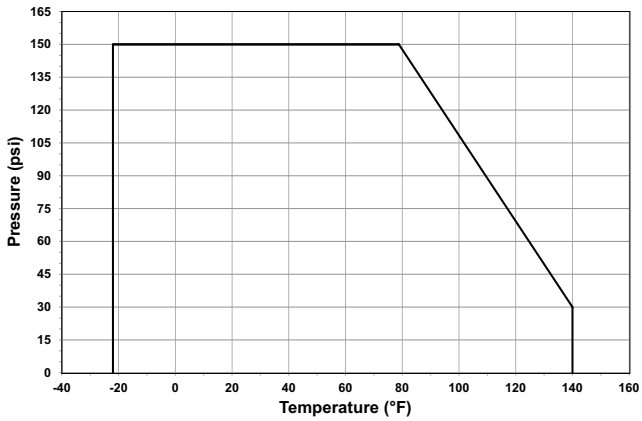

PVDF

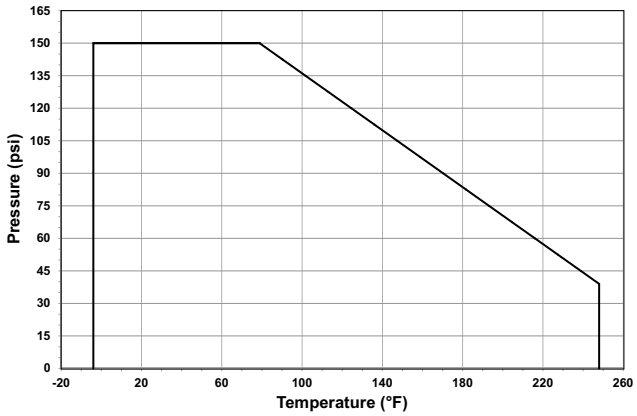

Pressure-Temperature

Material	Temperature Range (°F)	Max Pressure (psi)
PVC	32 to 140	150
CPVC	32 to 176	150
PP	32 to 176	150*
ABS	-40 to 140	150
PVDF	-4 to 284	150

*Dependant on end connection as shown in P-T curves

The Type 244 is rated for full vacuum service. Maximum differential pressure of 15psi at 122°F.

Flow

The following information is based on water applications at 68° F

Flow Characteristics

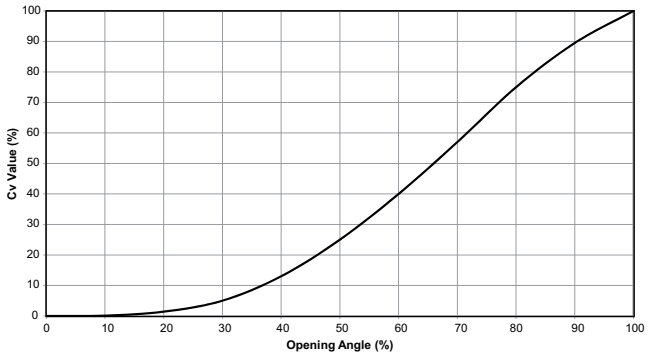

Cv Value

Size (inch)	d (mm)	Cv (gal/min)
2	63	103
2½	75	154
3	90	210
4	110	455
5	140	805
6	160	1162
8	225	2772
10	280	3570
12	315	5110

Dimensions

The following tables are shown in millimeters unless otherwise specified

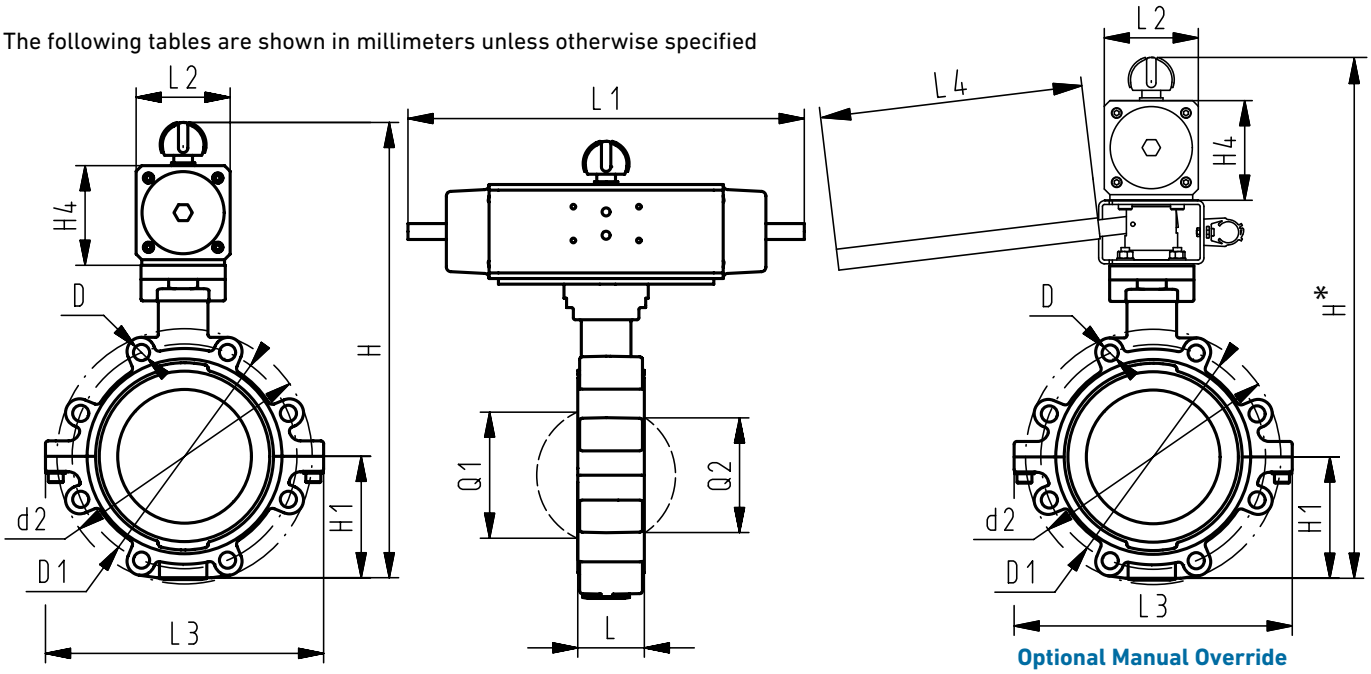

All Materials

Optional Manual Override
All Materials 2" - 8" (d63 - d225)

All Materials

Size (inch)	d (mm)	d2	D	D1	H	H*	H1	H4	L	L1	L2	L3	L4	Q1	Q2
2	63	160	UNC 5/8	120.6	328	388	77	70	45	276	65	165	200	40	-
2½	75	180	UNC 5/8	139.7	340	400	83	70	46	276	65	182	200	54	35
3	90	195	UNC 5/8	152.4	361	421	89	78	49	326	72	210	200	67	50
4	110	226	UNC 5/8	190.5	402	462	106	86	56	370	80	240	250	88	74
5	140	258	UNC 3/4	215.9	441	501	121	z96	64	411	90	272	250	113	97
6	160	284	UNC 3/4	241.3	471	531	133	106	72	423	100	300	250	139	123
8	225	341	UNC 3/4	298.4	530	590	159	118	73	452	112	360	250	178	169
10	280	412	UNC 7/8	362.0	660	-	205	148	113	648	137	440	-	210	207
12	315	482	UNC 7/8	431.8	715	-	234	157	113	663	145	510	-	256	253

H* including optional manual override

Dimensions

The following tables are shown in millimeters unless otherwise specified

Pneumatic Connection Detail

Actuator Front

Actuator Top

Position Indicator Top

Position Indicator Front

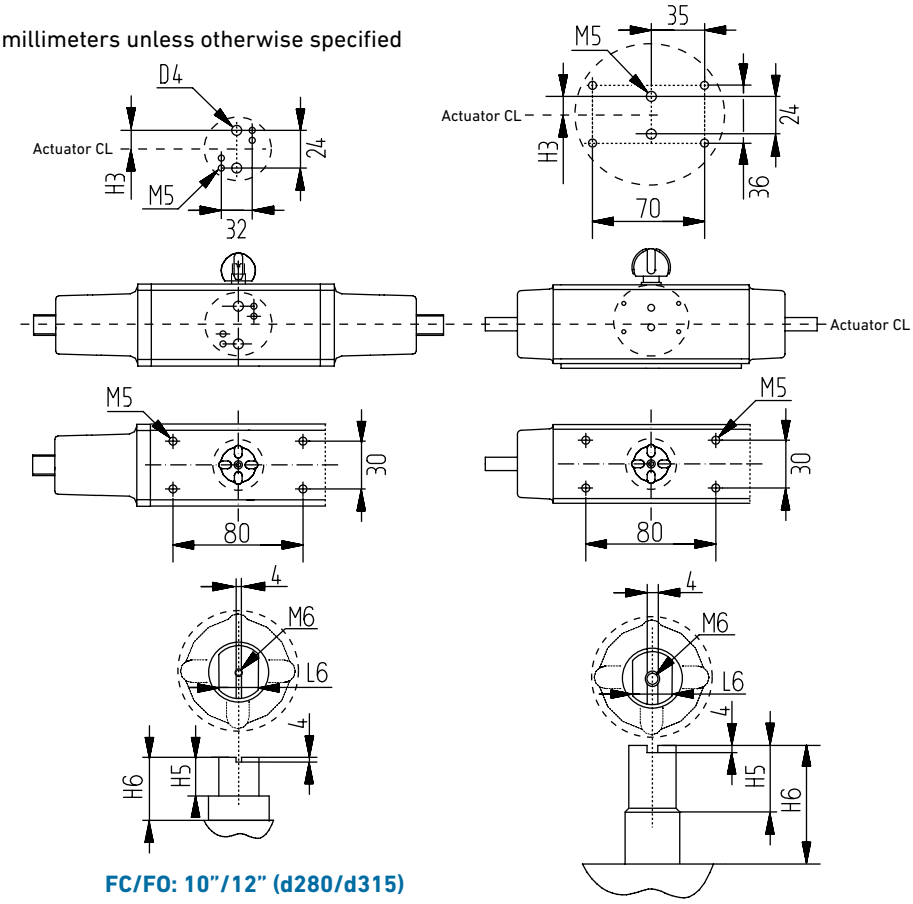

FC/FO: 10”/12” (d280/d315)
DA: 12” (d315)

All Other Configurations

All Materials

Size (inch)	d (mm)	Size	Action	D4	H3	H5	H6	L6
2	63	PA30	FC/FO	G⅛”	17.9	13	20	10
2½	75	PA30	FC/FO	G⅛”	17.9	13	20	10
3	90	PA35	FC/FO	G⅛”	17.9	13	20	12
4	110	PA40	FC/FO	G⅛”	21	13	30	12
5	140	PA45	FC/FO	G⅛”	21	16	30	15
6	160	PA50	FC/FO	G⅛”	21	17	30	15
8	225	PA55	FC/FO	G⅛”	25	19	30	19
10	280	PA65	FC	G¼”	34	19.5	30	22
10	280	PA70	FO	G¼”	38	19.5	30	24
12	315	PA70	FC/FO	G¼”	43	19.5	30	24
2	63	PA35	DA	G⅛”	12.5	13	20	10
2½	75	PA35	DA	G⅛”	12.5	13	20	10
3	90	PA40	DA	G⅛”	17.9	13	20	10
4	110	PA45	DA	G⅛”	17.9	13	20	12
5	140	PA45	DA	G⅛”	17.9	13	20	12
6	160	PA55	DA	G⅛”	21	16	30	15
8	225	PA55	DA	G⅛”	21	16	30	15
10	280	PA65	DA	G⅛”	25	19	30	19
12	315	PA70	DA	G¼”	26	19	30	19

Pneumatic Actuator
PA30–90

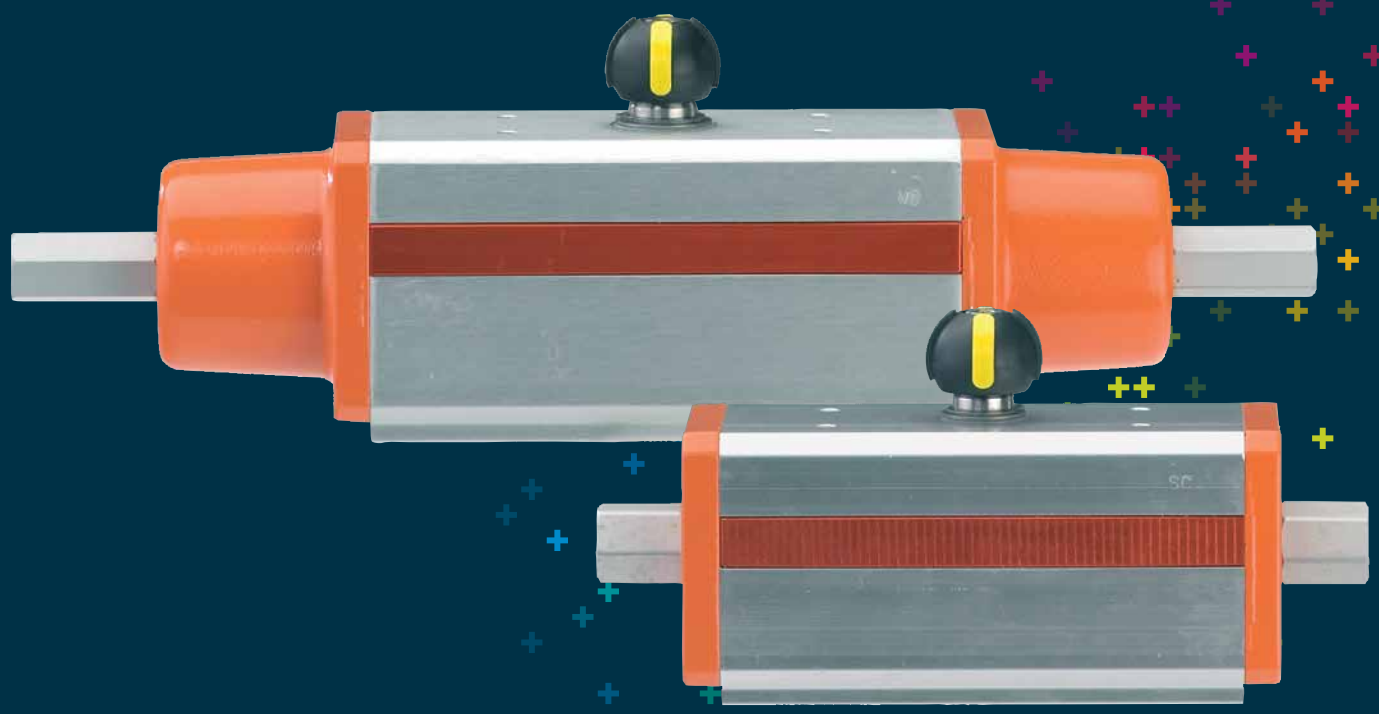

General

- **Torque Range:** 5–1,327 ft-lb
- **Action:** Fail close, fail close, double acting
- **Type:** Scotch yoke
- **Lubrication:** Self lubricating strips
- **Housing Material:** Anodized Aluminum
- **Housing:** Rolled cylinder
- **Position Indicator:** Optical, integrated
- **Stoke Limiter:** ±10°

Key Compliance

- **Mount:** DIN/ISO 5211
- **Drive:** DIN 3337
- **Accessories Mount:** VDI/VDE 3845
- **Pneumatic Port Mount:** NAMUR (PA60-80 FC/FO, PA70-90 DA)
- **Pneumatic Port Threads:** ISO 228
- **Machinery Directive:** 2006/42/EC Appendix VII Part B
- **Safety in Terminology, Methodology:** DIN EN ISO 12100-1
- **Safety in Technical Principles:** DIN EN ISO 12100-2
- **Permitted Tolerance:** DIN 7168

Sample Specification

The PA30–PA90 Pneumatic Actuators shall be of scotch yoke design with options for fail-safe to close, fail-safe to open and double acting functionalities. The actuator housing shall be anodized aluminum with aluminum end caps that are bolted to the actuator housing to create a pressure tight seal and secure any spring packs. All variants shall feature a stroke limiter of ±10°. The actuator top mount shall be NAMUR compliant with an optical position indicator utilizing colored tabs with four insert positions stationed 90° apart. The pneumatic connection ports shall be threaded BSP and fail-safe variants shall utilize a pneumatic exhaust port insert. The actuator base mount shall be of standard F0 pattern per DIN ISO 5211 and the drive shall be a metric double square. Actuator information shall be laser engraved onto a name plate mounted on the side of the actuator. All actuators shall be manufactured under ISO 9001 for Quality and ISO14001 for Environmental Management.

Components

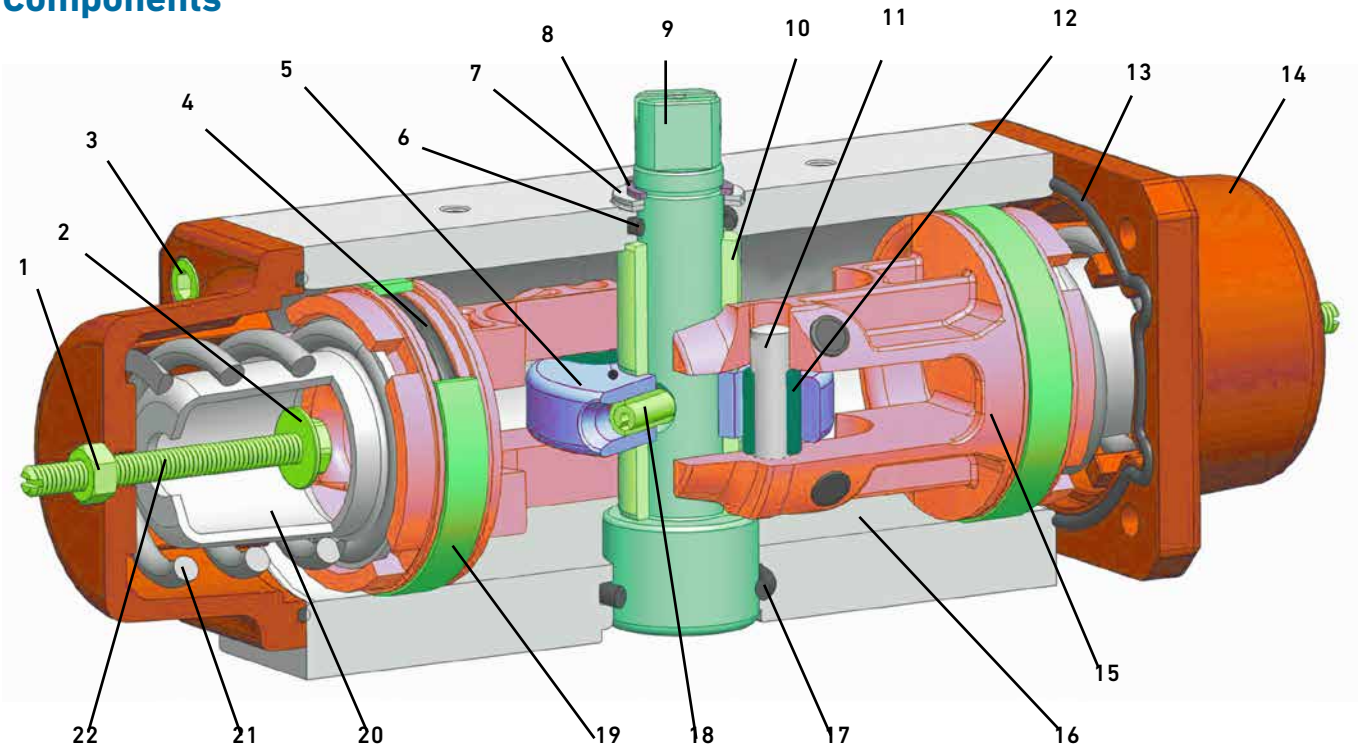

Components

Part	Description	Material	Part	Description	Material
1	Stroke limiter nut	Stainless steel	12	Sleeve bushing	Polyurethane
2	Stroke limiter washer	Stainless steel	13	Housing o-ring	NBR
3	Body bolt	Stainless steel	14	Housing cap	Aluminum alloy
4	Piston seal backing o-ring	NBR	15	Piston	Aluminum alloy
5	Scotch yoke	Steel alloy	16	Housing	Anodized aluminum
6	Upper shaft o-ring	FKM	17	Lower shaft o-ring	NBR
7	Shaft washer	Stainless steel	18	Scotch yoke pin	Steel alloy
8	Retaining clip	Stainless steel	19	Piston seal	Polyurethane
9	Shaft	Stainless steel	20	Spring cap	Steel alloy
10	Spacer bushing	Acetalic resins	21	Spring	Steel alloy
11	Piston sleeve	Steel alloy	22	Stroke limiter bolt	Stainless steel

Key Design Features

The PA30-90 Pneumatic Actuator Family offers several design features to improve performance and benefit end users. The piston seal (19. above) is self-lubricating to prevent the piston from sticking to the actuator housing even in extremely low cycle count applications. The scotch yoke design reduces friction between internal components and required piston surface area, reducing the overall footprint and weight of the actuator when compared to rack and pinion style actuators of similar size. The housing (16. above) is manufactured with rolled aluminum, reducing the surface roughness resulting in smooth actuation cycles and further preventing the piston from sticking.

Technical Data

Control Diagrams

Red arrow indicating rotation direction when actuated. Spring return versions shown in fail position. Double acting version shown in closed position. Actuator top shown.

Double Acting: 5/2 Solenoid

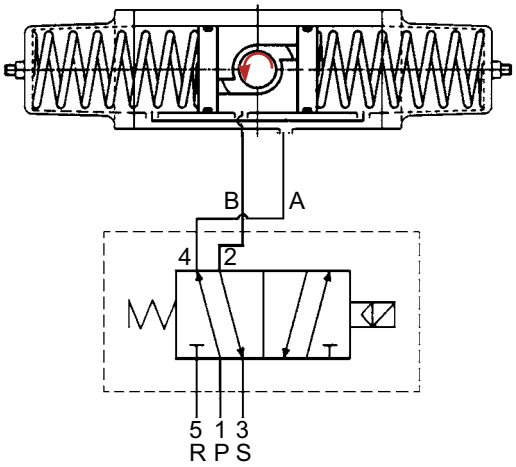

Control Media Volume and Weight

Size	Action	Volume (dm³)	Weight (lb)
PA30	FC/FO	0.16	4.4
PA35	FC/FO	0.25	5.3
PA40	FC/FO	0.33	7.7
PA45	FC/FO	0.51	10.1
PA50	FC/FO	0.7	14.7
PA55	FC/FO	1.02	20.7
PA60	FC/FO	1.38	24.2
PA65	FC/FO	2.02	35
PA70	FC/FO	2.69	42.2
PA75	FC/FO	4.21	58.7
PA80	FC/FO	5.58	75.7
PA30	DA	0.15	2.2
PA35	DA	0.22	2.8
PA40	DA	0.28	3.4
PA45	DA	0.43	4.1
PA50	DA	0.59	6.2
PA55	DA	0.87	7.5
PA60	DA	1.18	11.7
PA65	DA	1.74	15.8
PA70	DA	2.38	18.5
PA75	DA	3.51	26.4
PA80	DA	4.67	30.8
PA85	DA	7.56	43.3
PA90	DA	10.01	55.9

Fail Close: 3/2 Solenoid

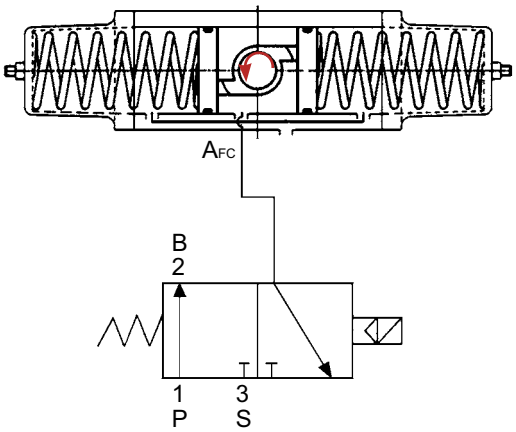

Fail Open: 3/2 Solenoid

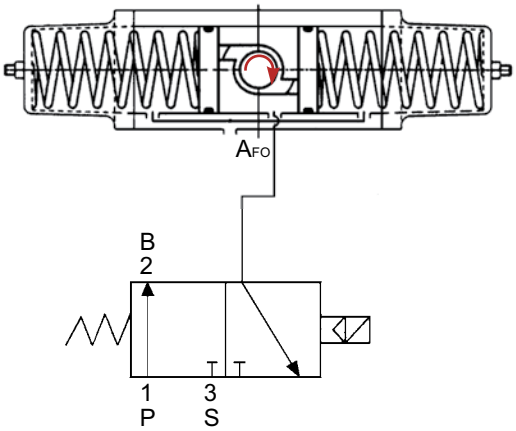

Spring Return: 5/2 Solenoid
Fail close version shown

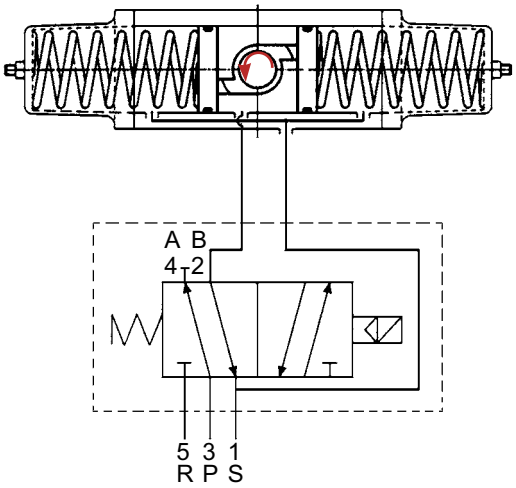

Spring Return Torque Specification

The following tables are shown in foot-pounds unless otherwise specified

Output Torque

Type	Operating Angle	40 psi Control Pressure		60 psi Control Pressure		80 psi Control Pressure	
		Air	Spring	Air	Spring	Air	Spring
PA30	0°	11.1	7.4	16.6	11.1	22.1	14.8
	45°	5.5	5.5	8.3	8.3	11.1	11.1
	90°	7.4	11.1	11.1	16.6	14.8	22.1
PA35	0°	16.6	11.1	25	16.6	33.2	22.1
	45°	8.2	8.2	12.4	12.4	16.6	16.6
	90°	11.1	16.6	16.6	25	22.1	33.2
PA40	0°	22.1	14.8	33.2	22.1	44.3	29.5
	45°	11.1	11.1	16.6	16.6	22.1	22.1
	90°	14.8	22.1	22.1	33.2	29.5	44.3
PA45	0°	33.2	22.1	49.8	33.2	66.4	44.3
	45°	16.6	16.6	25	25	33.2	33.2
	90°	22.1	33.2	33.2	49.8	44.3	66.4
PA50	0°	44.3	29.5	66.4	44.3	88.5	59
	45°	22.1	22.1	33.2	33.2	44.3	44.3
	90°	29.5	44.3	44.3	66.4	59	88.5
PA55	0°	66.4	44.3	99.6	66.4	132.8	88.5
	45°	33.2	33.2	49.8	49.8	66.4	66.4
	90°	44.3	66.4	66.4	99.6	88.5	132.8
PA60	0°	88.5	59	132.8	88.5	177	118
	45°	44.3	44.3	66.4	66.4	88.5	88.5
	90°	59	88.5	132.8	132.8	118	177
PA65	0°	132.8	88.5	132.8	132.8	265.5	177
	45°	66.4	66.4	99.6	99.6	132.8	132.8
	90°	88.5	132.8	132.8	199.1	177	265.5
PA70	0°	177	118	265.5	177	354	236
	45°	88.5	88.5	132.8	132.8	177	177
	90°	118	177	177	265.5	236	354
PA75	0°	265.5	177	398.3	265.5	531	354
	45°	132.8	132.8	199.1	199.1	265.5	265.5
	90°	177	265.5	265.5	398.3	354	531
PA80	0°	354	236	531	354	70.8	472
	45°	177	177	265.5	265.5	354	354
	90°	236	354	354	531	472	708.1

Torque Characteristics

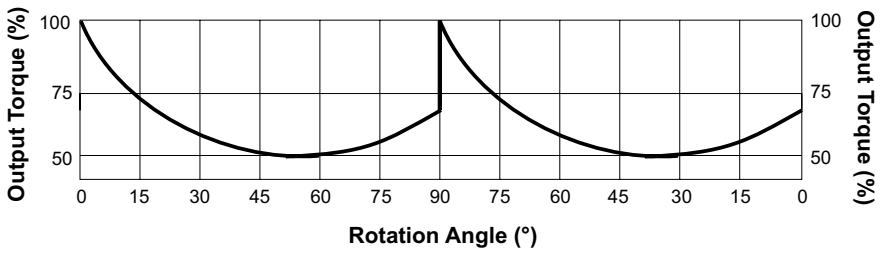

Double Acting Torque Specification

The following tables are shown in foot-pounds unless otherwise specified

Output Torque

Type	Operating Angle	Control Pressure					
		44 psi	58 psi	73 psi	80 psi	87 psi	101 psi
PA30	0°	11.9	15.8	19.8	22.1	23.7	27.7
	45°	5.9	7.9	9.9	11.1	11.9	13.9
	90°	8.9	11.9	14.8	16.6	17.8	20.7
PA35	0°	17.7	23.7	29.6	33.2	35.6	41.6
	45°	8.9	11.9	14.8	16.6	17.7	20.8
	90°	13.3	17.9	22.3	25.1	26.8	31.2
PA40	0°	23.7	31.6	39.5	44.3	47.4	55.3
	45°	11.9	15.8	19.8	22.1	23.7	27.7
	90°	17.8	23.7	29.6	33.2	35.6	41.5
PA45	0°	35.4	47.4	59.3	66.4	71.2	83.2
	45°	17.7	23.9	29.6	33.2	35.4	41.6
	90°	26.6	35.8	44.7	50.2	53.5	62.4
PA50	0°	47.4	63.2	79	88.5	94.9	110.6
	45°	23.7	31.6	39.5	44.3	47.4	55.3
	90°	35.5	47.4	59.3	66.4	71.1	83
PA55	0°	70.8	94.7	118.6	132.8	142.5	166.4
	45°	35.4	47.8	59.3	66.4	70.8	83.2
	90°	53.1	71.7	89.4	99.6	107.1	124.8
PA60	0°	94.5	126.4	158.1	177	189.6	221.3
	45°	47.4	63.2	79	88.5	94.9	110.6
	90°	71.1	94.9	118.5	132.8	142.3	166
PA65	0°	141.6	189.4	237.2	265.5	285	332.8
	45°	70.8	95.6	118.6	132.8	141.6	166.4
	90°	106.2	143.4	178.8	199.1	214.2	249.6
PA70	0°	189.6	252.9	316.1	354	379.3	442.5
	45°	94.9	126.4	158.1	177	189.6	221.3
	90°	142.3	189.6	237.1	265.5	284.5	331.9
PA75	0°	283.2	378.8	474.4	531	570	665.6
	45°	141.6	191.2	237.2	265.5	283.2	332.8
	90°	212.4	286.8	357.6	398.3	428.4	499.2
PA80	0°	379.3	505.7	632.2	708.1	758.7	885.1
	45°	189.6	252.9	316.1	354	379.3	442.5
	90°	284.5	379.3	474.2	531	569	663.8
PA85	0°	566.4	757.6	948.8	1062.1	1140	1331.2
	45°	283.2	382.4	474.4	531	566.4	665.6
	90°	424.8	573.5	715.4	796.6	856.8	998.4
PA90	0°	758.7	1011.5	1264.4	1416.1	1517.2	1770.1
	45°	379.3	505.8	632.2	708.1	758.7	885.1
	90°	569	758.7	948.3	1062.1	1138	1327.6

Torque Characteristics

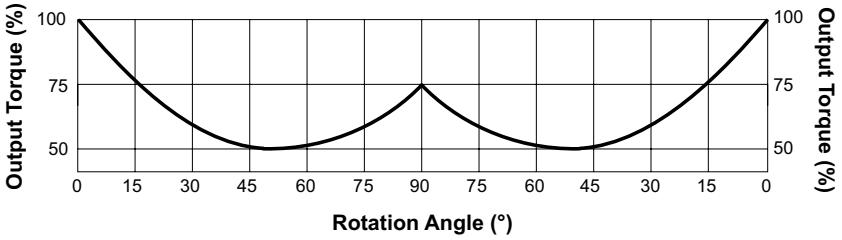

Dimensions

The following tables are shown in millimeters unless otherwise specified

PA30-90: Top Mount

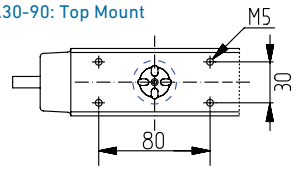

PA30-90: Position Indicator

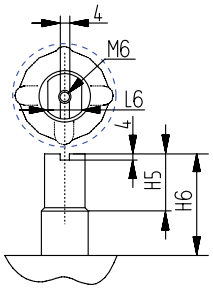

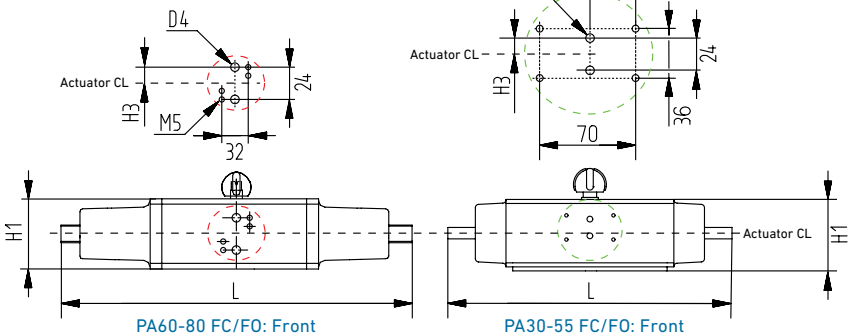

PA60-80 FC/FO: Front
PA70-90 DA: Front

PA30-55 FC/FO: Front
PA30-65 DA: Front

PA30-90: Base

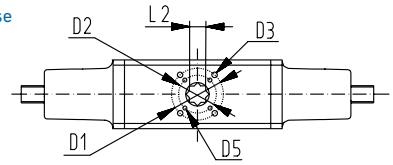

PA30-90: Right

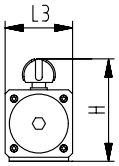

Dimensions

Size	Action	ISO	D1	D2	D3	D4	D5	H	H1	H3	H5	H6	L	L2	L3	L6
PA30	FC/FO	F04	-	42	-	G⅛"	M5x9	102	70	17.9	13	20	240	11	65	10
PA35	FC/FO	F05/F07	70	50	M8x15	G⅛"	M5x9	111	77.5	17.9	13	20	294	14	72	12
PA40	FC/FO	F05/F07	70	50	M8x15	G⅛"	M6x11	129	86	21	13	30	320	14	80	12
PA45	FC/FO	F05/F07	70	50	M8x15	G⅛"	M6x11	139	96	21	16	30	357	17	90	15
PA50	FC/FO	F05/F07	70	50	M8x15	G⅛"	M6x11	149	106	21	17	30	368	17	100	15
PA55	FC/FO	F07/F10	102	70	M10x17	G⅛"	M8x15	161	118	25	19	30	436	22	112	19
PA60	FC/FO	F07/F10	102	70	M10x17	G¼"	M8x15	173	130	26	19	30	456	22	124.7	19
PA65	FC/FO	F10/F12	125	102	M12x21	G¼"	M10x17	191	148	34	19.5	30	565.5	27	136.5	22
PA70	FC/FO	F12	-	125	-	G¼"	M12x21	196	153.2	38	19.5	30	602	27	145	24
PA75	FC/FO	F14	-	140	-	G¼"	M16x25	229	186	43	19.5	30	712	36	165.5	27
PA80	FC/FO	F14	-	140	-	G¼"	M16x25	241	198	44	24.5	30	767	36	180	32
PA30	DA	F03/F05	50	36	M6x11	G⅛"	M5x9	92	60	12	10	20	168	9	55	9
PA35	DA	F04	-	42	-	G⅛"	M5x9	98	65.7	12.5	13	20	182	11	60	10
PA40	DA	F04	-	42	-	G⅛"	M5x9	102	70	17.9	13	20	190	11	65	10
PA45	DA	F05/F07	70	50	M8x15	G⅛"	M6x11	111	77.5	17.9	13	20	225	14	72	12
PA50	DA	F05/F07	70	50	M8x15	G⅛"	M6x11	129	86	21	13	30	240	14	80	12
PA55	DA	F05/F07	70	50	M8x15	G⅛"	M6x11	139	96	21	16	30	268	17	90	15
PA60	DA	F05/F07	70	50	M8x15	G⅛"	M6x11	149	106	21	17	30	314	17	100	15
PA65	DA	F07/F10	102	70	M10x17	G⅛"	M8x15	161	118	25	19	30	336	22	112	19
PA70	DA	F07/F10	102	70	M10x17	G¼"	M8x15	173	130	26	19	30	365	22	124.7	19
PA75	DA	F10/F12	125	102	M12x21	G¼"	M10x17	191	148	34	19.5	30	401.5	27	136.5	22
PA80	DA	F12	-	125	-	G¼"	M12x21	196.5	153	38	19.5	30	445	27	145	24
PA85	DA	F14	-	140	-	G¼"	M16x25	229	186	43	19.5	30	529	36	165.5	27
PA90	DA	F14	-	140	-	G¼"	M16x25	241	198	44	24.5	30	581	36	180	32

Pneumatic Switch Box
Type NS

General

- **Valve Type**: Rotary
- **Switch**: Mechanical, inductive
- **Body**: Polyamide
- **Cover**: Polycarbonate
- **Mounting Bracket**: 30% glass fiber reinforced Polyamide
- **Shaft**: Polyamide
- **Hardware**: Stainless steel 304, inclusive
- **Seal**: EPDM, NBR
- **Temperature**: -13°F to 176°F
- **Protection Class**: IP67
- **Cable Gland:** M20×1.5
- **Optical Indicator**: Integrated, beacon

Key Certifications and Conformity

- VDE/VDI 3845
- CE

Mounting

A mounting pad in integrated into the switch housing. The height is adjustable and the feet can be reversed to accommodate multiple NAMUR mounts. Stainless steel mounting hardware is included for assembly with GF actuators.

Sample Specification

The Type NS Pneumatic Switch Box shall be be used in conjunction with a rotatory open/close actuator. All variants shall utilize cams with 360° of adjustable positioning. A beacon shall offer optical position indication. The housing shall be sealed from the atmosphere via elastomeric gaskets. The mounting bracket height and width shall be adjustable. All switch boxes shall be manufactured under ISO9001 for Quality and ISO14001 for Environmental Management.

Optional Features

- **Explosion Proof:** ATEX
- **Intrinsically Safe:** ATEX

Mechanical Switch Technical Data

AgNi Contacts

- **Voltage:** 250V
- **Max AC Current:** 10A @ 250V
- **Max DC Current:** 2.5A @ 24V
- **Temperature:** -4 °F to 176 °F
- **Beacon:** Dome

Au Contacts

- **Voltage:** 250V
- **Max AC Current:** 0.1A @ 250V
- **Max DC Current:** 0.1A @ 24V
- **Temperature:** -4 °F to 176 °F
- **Beacon:** Dome

Inductive Switch Technical Data

PNP/NPN

- **Voltage:** 10-30VDC
- **Max Current:** 100mA
- **Switch Type:** 3-wire proximity
- **Non-Loaded Supply Current:** 15mA
- **Max Frequency:** 1000 Hz
- **Output Indicator:** Yellow LED
- **Temperature:** -13 °F to 176 °F
- **Beacon:** Dome

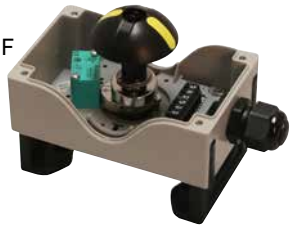

Optional Switches

Explosion Proof

- **Housing Material:** Vestamid
- **Switch:** BARTEC
- **Switch Type:** Mechanical
- **Contact:** Ag
- **Voltage:** 250V
- **Max AC Current:** 4A @ 250V
- **Max DC Current:** 400mA @ 30V
- **Rated Zones:** Zone 1 / Zone 22
- **ATEX Explosion Protection:** II 2G EEx d IIC T6
- **ATEX Certification:** EPS 14 ATEX 1 765 U
- **IECEx Explosion Protection:** Ex d IIC Gb
- **IECEx Certifcation:** IECEx EPS 14.0091 U
- **Protection Class:** IP66
- **Temperature:** -4 °F to 104 °F
- **Beacon:** Flat

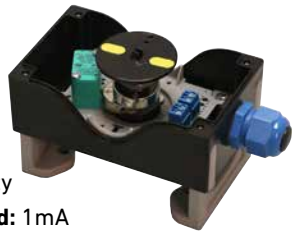

Intrinsically Safe

- **Housing Material:** Vestamid
- **Switch:** PEPPERL + FUCHS
- **Voltage:** 8.2VDC
- **Switch Type:** 2-wire proximity
- **Current with Switch Engaged:** 1mA
- **Current with Switch Disengaged:** 3mA
- **Max Frequency:** 1000 Hz
- **EMC Compliance:** IEC EN60947-5-2
- **Namur Compliance:** DIN EN60947-5-6
- **SIL Classification:** IEC61508
- **Rated Zones:** Zone 1 / Zone 21
- **ATEX Protection:** II 2G EEx ia IIC T6 Gb
- **Protection Class:** IP67
- **Temperature:** -13 °F to 212 °F
- **Beacon:** Flat

Wiring

Inductive

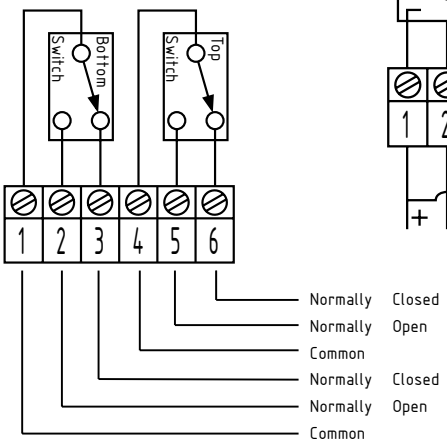

Mechanical

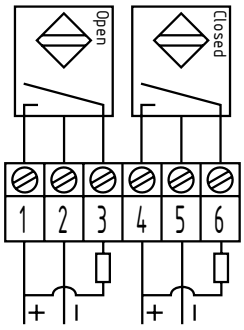

Dimensions

The following dimensions are shown in millimeters unless otherwise specified

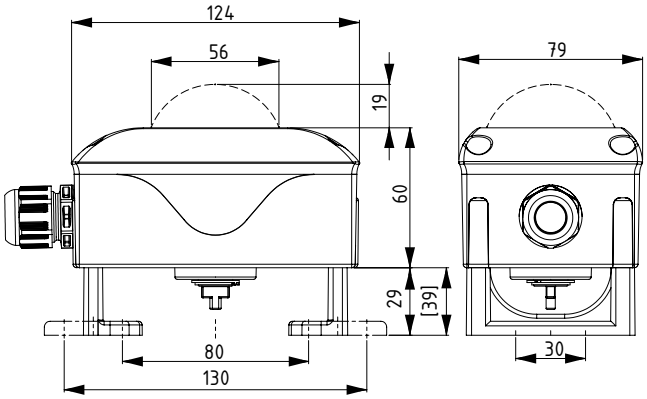

+GF+

Actuated Butterfly and Ball Valve
Manual Override

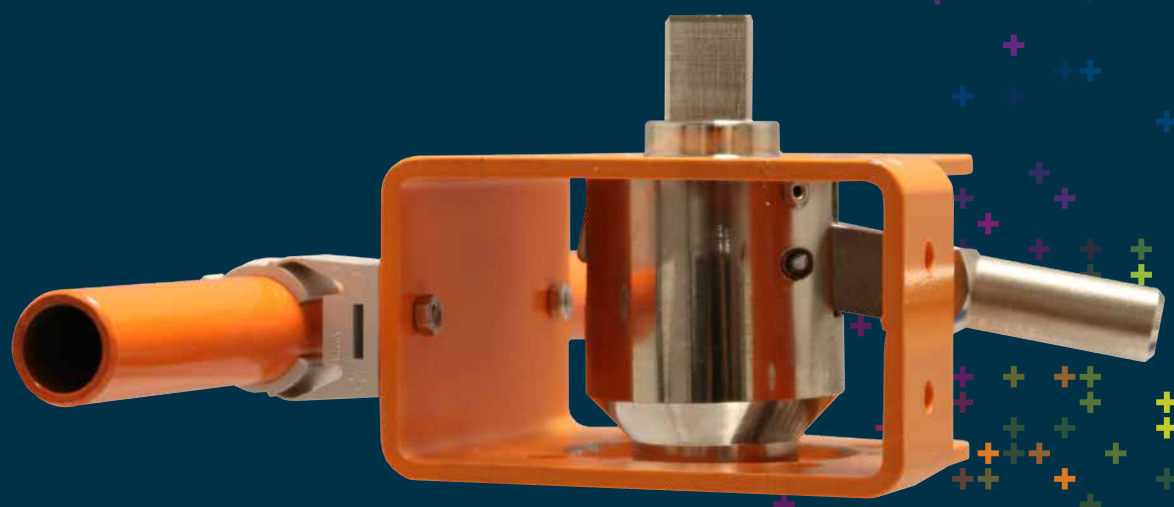

General

- **Actuator:** Electric, pneumatic
- **Butterfly Valve Size**: 2"–8"
- **Ball Valve Size: 2**½"-4"
- **Coupling Material**: Stainless steel
- **Lever Material:** Steel
- **Adapter Coating**: Nickel plated steel
- **Hardware:** Inclusive
- **Hardware Material:** Stainless steel
- **Mounting**: ISO 5211
- **Standard Pack Quantity**: 1 piece

Standard Assemblies

Of the valve types detailed in this document as compatible with the manual override, only the electrically actuated ball valve family offers standard assemblies that include the manual override, however one can be added as an accessory to all other listed standard assembly types.

Sample Specification

GF's Actuated Butterfly and Ball Valve Manual Override shall be declutchable in design and utilized with a butterfly or ball valve assembly with a 90 degree stroke. The adapter assembly shall utilize two drives, one male drive shall adapt to the actuator and one female drive shall adapt to the valve. The adapter handle attachment shall declutch the two drives when an operator applies pressure to the handle allowing for the manual override function. Required hardware for mounting to a GF valve and actuator shall be inclusive. The handle shall not be mechanically joined to the adapter while in service and secured in provided clips while not in service. All manual overrides shall be manufactured under ISO9001 for Quality and ISO14001 for Environmental Management.

Components

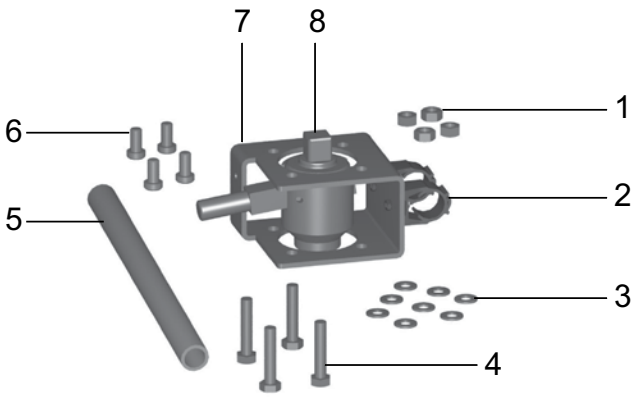

Components

Part	Description	Material
1	Valve side nuts	304 Stainless steel
2	Handle clips	PP
3	Valve side washers	304 Stainless steel
4	Valve side bolts	304 Stainless steel
5	Handle	Epoxy coated steel
6	Actuator side bolts	304 Stainless steel
7	Housing	Epoxy coated steel
8	Adapter	Nickel plated steel

Compatibility

Butterfly Valves

Size (inch)	Type	Action	Actuator	Part Number	Female (mm)	Male (mm)
2	PA	FC/FO	PA30	198000630	11	11
2½	PA	FC/FO	PA30	198000630	11	11
3	PA	FC/FO	PA35	198000631	11	14
4	PA	FC/FO	PA40	198000628	14	14
5	PA	FC/FO	PA45	198000629	14	17
6	PA	FC/FO	PA50	198000625	17	17
8	PA	FC/FO	PA55	198000627	17	22
2	PA	DA	PA35	198000630	11	11
2½	PA	DA	PA35	198000630	11	11
3	PA	DA	PA40	198000630	11	11
4	PA	DA	PA45	198000628	14	14
5	PA	DA	PA45	198000628	14	14
6	PA	DA	PA55	198000625	17	17
8	PA	DA	PA55	198000625	17	17
2	EA	-	EA120	198000623	11	17
2½	EA	-	EA120	198000623	11	17
3	EA	-	EA120	198000623	11	17
4	EA	-	EA120	198000624	14	17
5	EA	-	EA120	198000624	14	17
6	EA	-	EA120	198000625	17	17
8	EA	-	EA250	198000627	17	22

Ball Valves

Size (inch)	Type	Action	Actuator	Part Number	Female (mm)	Male (mm)
2½	PA	FC/FO	PA30	198000630	11	11
3	PA	FC/FO	PA40	198000631	11	14
4	PA	FC/FO	PA40	198000628	14	14
2½	PA	DA	PA35	198000630	11	11
3	PA	DA	PA40	198000630	11	11
4	PA	DA	PA45	198000628	14	14
2½	EA	-	EA120	198000623	11	17
3	EA	-	EA120	198000623	11	17
4	EA	-	EA120	198000624	14	17

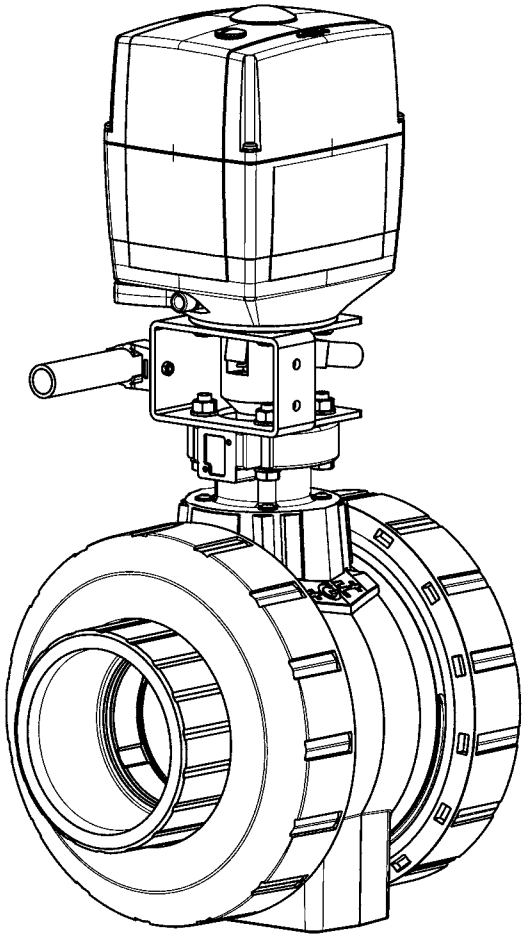

Pneumatically Actuated Dosing Valve

DIASTAR 604/605

General

- **Size**: ½"
- **Material**: PVC, CPVC, PROGEF® Standard PP, SYGEF® Standard PVDF
- **Diaphragm:** EPDM, FPM, PTFE/EPDM, PTFE/FPM
- **Actuator Housing**: Glass-filled PP
- **End Connection**: Solvent cement socket, threaded, flanged, fusion spigot union, fusion socket union, fusion spigot
- **Action**: FC, FO, DA
- **Top Works**: Threaded bonnet connection to valve body
- **Mounting:** Stainless steel threaded inserts

Key Certifications

- **FDA CFR 21 177.1520**: PP and PVDF
- **FDA CFR 21 177.2600**: EPDM and FPM
- **FDA CFR 21 177.1550**: PTFE
- **USP 25 Class VI (physiological non-toxic)**: PP and PVDF

Optional Features

- **Pilot Valve**: 24VAC/DC, 110VAC, 230VAC
- **End Connection**: Alternatives available upon request
- **Face Seals**: Alternatives available upon request
- **Cleaned**: Silicone free/oil free

Sample Specification

DIASTAR 604/605 Valves shall be available in the fail-safe to close, fail-safe to open and double acting configurations. The actuator shall be fully molded glass-filled polypropylene and integrated to the valve body. The pilot solenoid connection shall be ¼" threaded BSP. The bonnet to body connection shall be threaded. The diaphragm material shall be indicated by a color specific insert. Diaphragms of PTFE material shall have an elastomeric backing. The stroke shall be indicated by a optical indicator. A diaphragm leak detection indicator shall be integrated. ANSI flanged versions shall meet ANSI B16.5 150lb standards. All valves shall be tested in accordance to ISO9393 and designed to ISO16136 standards. All valves shall be manufactured under ISO9001 for Quality and ISO14001 for Environmental Management. Following assembly, every valve shall be tested and certified bubble tight exceeding Class VI standards. PVC valves shall meet ASTM D1784 cell classification 12454 standards. CPVC valves shall meet ASTM D1784 cell classification 23447-B standards. PP valves shall meet ASTM D5847-14 cell classification PP0510B66851 standards. PVDF valves shall be type 1, grade 2 according to ASTM D3222 standards. Valves of all materials shall be RoHS compliant.

Pressure Rating

DIASTAR 604/605: The combined upstream and downstream process line pressures shall not exceed 90psi when the valve is closed. The process line pressure shall not exceed 90psi when the valve is open.

Definition of Valve Type

Type 604: Union

Type 605: Spigot

Components

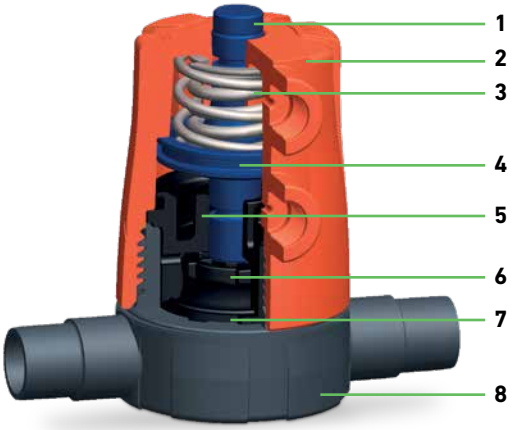

Components

Part	Description	Material
1	Position Indicator	Glass-filled PP
2	Bonnet	Glass-filled PP
3	Spring	Deltatone coated steel
4	Piston/Pressure Plate	Glass-filled PP
5	Inner Body	Glass-filled PP
6	Compressor	Glass-filled PPS
7	Diaphragm	EPDM, FPM, PTFE
8	Body	PVC, CPVC, PP, PVDF

Key Design Features

The Type 604/605 Dosing Valve utilizes several design features that are beneficial in chemical process applications. A commonly used diaphragm material in these applications is PTFE. All GF PTFE diaphragms are installed with a non-bonded elastomeric backing, either EPDM or FPM. The FPM backing is impregnated with approximately 15% PTFE. These diaphragms are available with all Type 604/605 Dosing Valve body materials. The backing material completely covers the PTFE diaphragm with the exception of the diaphragm pin.

One concern with diaphragm valves in chemical process applications is permeation. The Type 604/605 diaphragm is designed to protect against damage commonly caused by permeation. The FPM/PTFE backing provides a chemically resistant barrier to protect the mechanical components inside the bonnet. The backing protects nearly the entire PTFE diaphragm to provide maximum protection against component corrosion.

Leak Detection

The DIASTAR 604/605 Pneumatically Actuated Dosing Valve features an integrated leak detection system by utilizing a small hole in the actuator bonnet. If the diaphragm is damaged or begins to leak, a small amount of media will leak out the bonnet through the weep hole located next to the lower pneumatic connection port as shown at right, thus alerting the operator that a failure has occurred. The weep hole does not affect the performance of the actuator and is not connection to the pressurized chambers of the actuator.

Technical Data

Pressure Temperature Curves

The following graphs are based on a 25 year lifetime water or similar media application

PVC

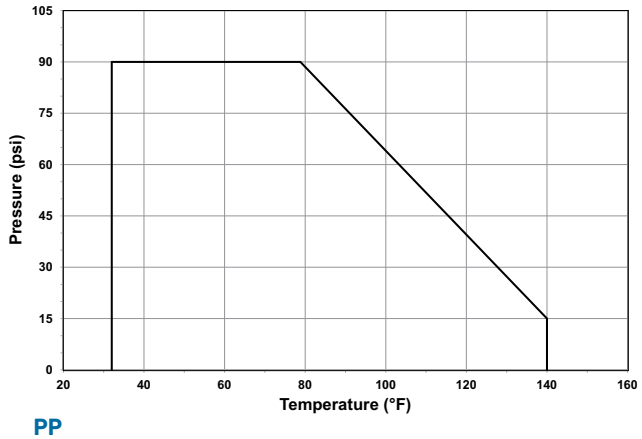

CPVC

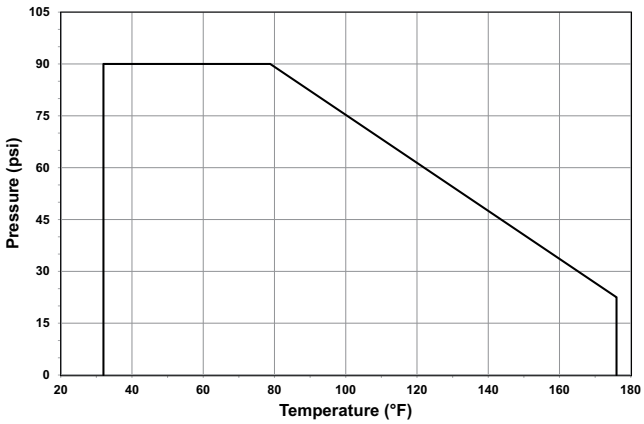

PP

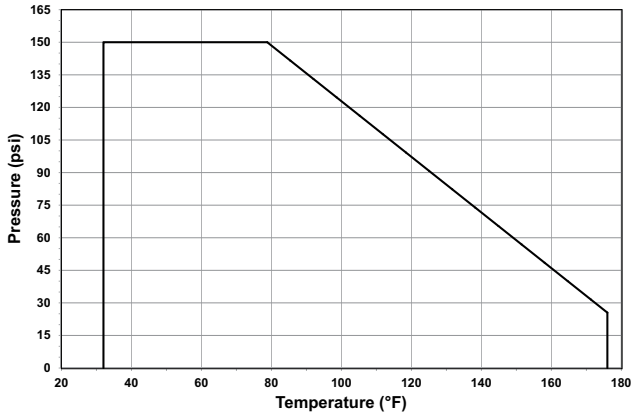

PVDF

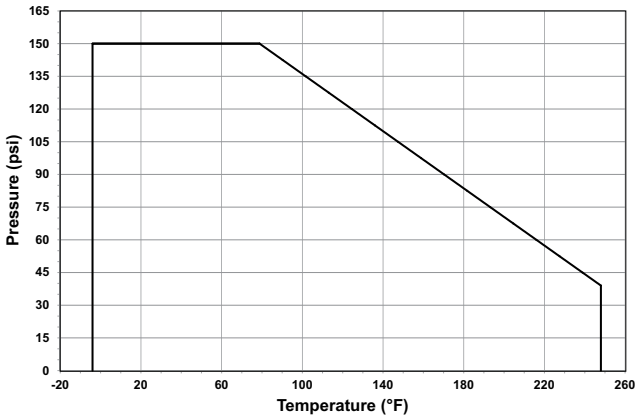

Pressure-Temperature

Material	Temperature Range (°F)	Max Pressure (psi)
PVC	32 to 140	90
CPVC	32 to 176	90
PP	32 to 176	90
PVDF	-4 to 284	90

Vacuum Service

DIASTAR 604/605 Valves are not rated for full vacuum service. Maximum differential pressure of 7.5 psi at 122°F.

Flow

The following information is based on water applications at 68° F

Cv Value

Size (inch)	d (mm)	Cv (gal/min)
½	20	8.4

Dosing Data

Exhaust Port Size (mm)	Control Media Volume (dm^3)	Cycle Time (ms)	Process Media Overrun (ml)
2*	0.02	114	238
4	0.02	66	138

*Standard configuration. Please contact GF for more information for custom assemblies.

Dimensions

The following tables are shown in millimeters unless otherwise specified

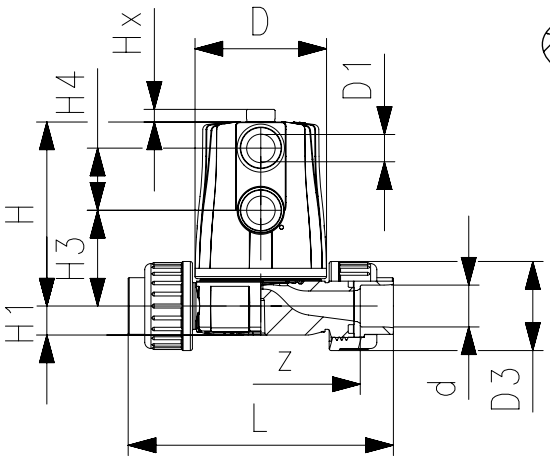

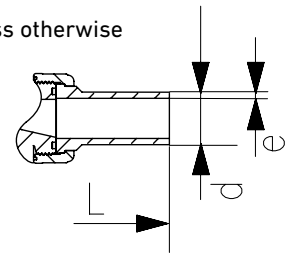

Type 604 IR/Butt

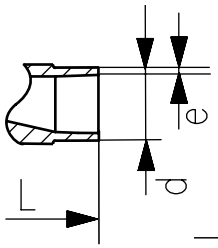

Type 605 IR/Butt

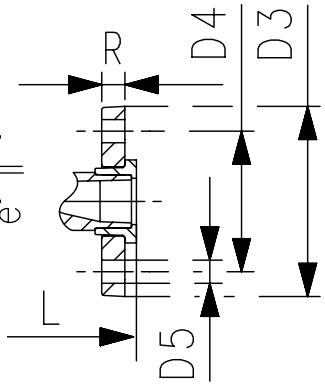

Type 605 Flanged

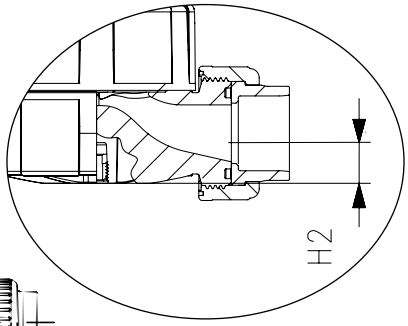

All Types Mounting

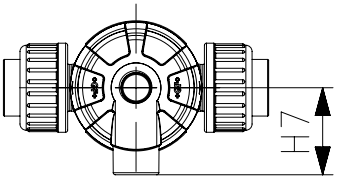

Type 604 Socket/Threaded

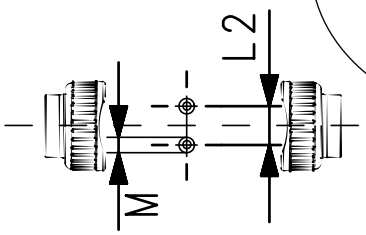

All Types

Size	d (mm)	D	D1	D3	L2	H	H1	H2	M	Hx
½	20	65	G¼"	43	25	89	14	12	M6	6

Type 604 PVC/CPVC

	IPS Socket		Threaded NPT	
Size (inch)	L	z	L	z
½	136	96	128	94

Type 605 PVC/CPVC

	ANSI Flanged				
Size (inch)	L	D3 (inch)	D4 (inch)	D5 (inch)	R (inch)
½	130	3.74	2.36	0.63	0.63

Type 604 PP

	Metric IR/Butt		Metric Socket		Threaded NPT	
d(mm)	L	e	L	z	L	z
20	196	1.9	128	100	132	98

Type 605 PP

		Metric IR/Butt		ANSI Flanged				
Size (inch)	d(mm)	L	e	L	D3 (inch)	D4 (inch)	D5 (inch)	R (inch)
½	20	124	1.9	134	3.74	2.36	0.63	0.63

Type 604 PVDF

	Metric IR/Butt		Metric Socket		Threaded NPT	
d(mm)	L	e	L	z	L	z
20	196	1.9	128	100	132	98

Type 605 PVDF

		Metric IR/Butt		ANSI Flanged				
Size (inch)	d(mm)	L	e	L	D3 (inch)	D4 (inch)	D5 (inch)	R (inch)
½	20	124	1.9	130	3.74	2.36	0.63	0.63

Pneumatically Actuated Diaphragm Valve

DIASTAR Six

General

- **Size**: ¾"–2"
- **Material**: PVC, CPVC, ABS
- **Diaphragm**: EPDM
- **Actuator Material**: Glass-filled PP
- **End Connection**: Solvent cement socket, threaded, flanged,
- **Action**: FC
- **Top Works**: Threaded connection to valve body
- **Standard Pack Quantity**: 1 valve

Key Certifications

- **FDA CFR 21 177.1520**: PP and PVDF
- **FDA CFR 21 177.2600**: EPDM and FPM
- **USP 25 Class VI (physiological non-toxic)**: PP

Optional Features

- **Pilot Valve**: 24VAC/DC, 110VAC, 230VAC
- **Diaphragm:** FPM, PTFE/EPDM
- **End Connection**: Alternatives available upon request
- **Face Seals**: Alternatives available upon request
- **Cleaned**: Silicone free/oil free

Sample Specification

The DIASTAR Six Valve shall be used in open/close applications and available in fail-safe to close configuration. The actuator housing shall be glass-filled polypropylene. The pneumatic connection shall be threaded BSP. The actuator bonnet to valve body connection shall be threaded with permanent markings on both the bonnet and body to ensure proper diaphragm compression. Union and spigot style bodies shall be fully molded. Standard versions shall included 304 stainless steel threaded mounting inserts. The stroke shall be indicated by a graduated indicator. ANSI flanged versions shall meet ANSI B16.5 150lb standards. All valves shall be tested in accordance to ISO9393 and designed to ISO16138 standards. All valves shall be manufactured under ISO9001 for Quality and ISO14001 for Environmental Management. Following assembly, every valve shall be tested and certified bubble tight exceeding Class VI standards. PVC valves shall meet ASTM D1784 cell classification 12454 standards. CPVC valves shall meet ASTM D1784 cell classification 23447-B standards. ABS valves shall meet ASTM D3965 cell classification 42222 standards. Valves of all materials shall be RoHS compliant.

Key Design Features

The DIASTAR Six Pneumatically Actuated Diaphragm Valve utilizes several unique design features. The bonnet to valve body connection is threaded whereas a traditionally designed diaphragm valve utilizes metal body bolts. However when a valve is used in hot line applications, the components of the valve thermally expand and contract. The thermal expansion rate of metal is significantly less than plastics, meaning the metal body bolts of a traditionally designed diaphragm valve need to be retorqued after hot line shut downs. The bonnet to body mechanical connection of the DIASTAR Six is completely plastic, thus eliminating the need for retorquing.

Technical Data

Pressure Temperature Curves

The following graphs are based on a 25 year lifetime water or similar media application

PVC

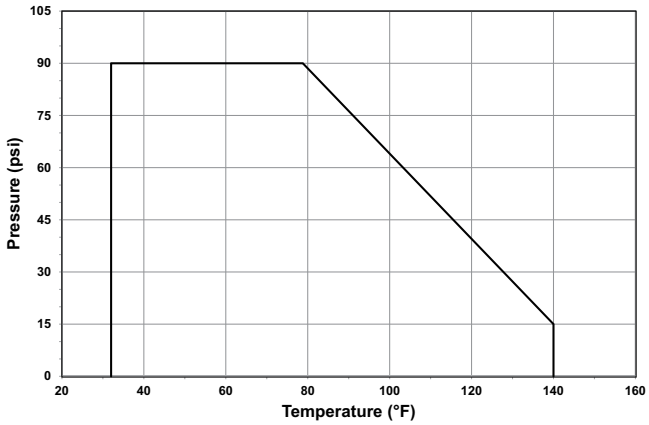

CPVC

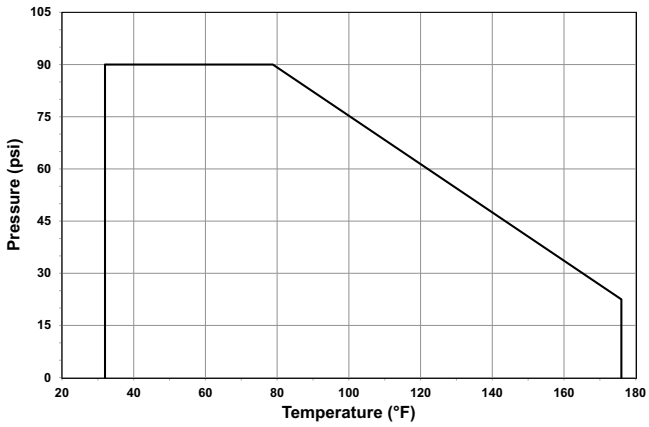

PP/PPn

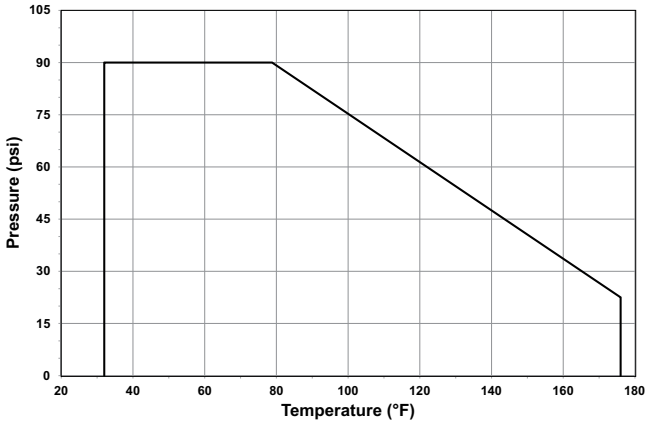

ABS

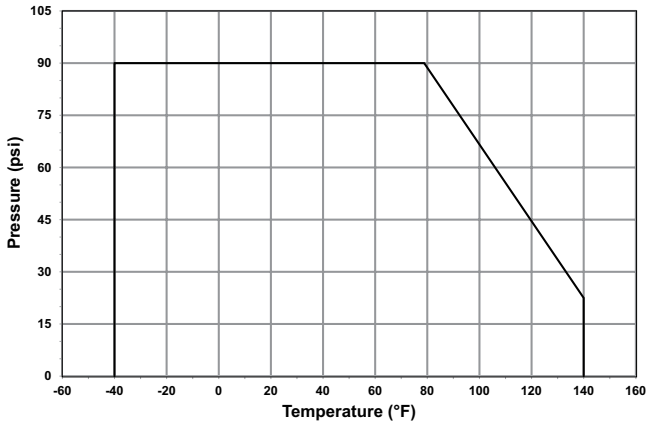

Pressure-Temperature

Material	Temperature Range (°F)	Max Pressure (psi)
PVC	32 to 140	90
CPVC	32 to 176	90
PP/PPn	32 to 176	90
ABS	-40 to 140	90

Pressure Rating

The combined upstream and downstream process line pressures shall not exceed 90psi when the valve is closed. The process line pressure shall not exceed 90psi when the valve is open.

Flow

The following information is based on water applications at 68° F

Cv Value

Size (inch)	d (mm)	Cv (gal/min)
½	20	8.4
¾	25	18.3
1	32	32.5
1¼	40	51.3
1½	50	66.8
2	63	82.2

Control Pressure EPDM

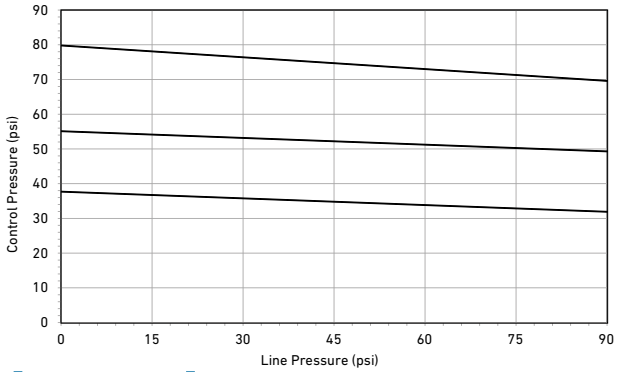

Key Design Feature

The DIASTAR Six's threaded bonnet design eliminated the need for valve body bolt holes. This allowed GF engineers to decrease the grade of the weir and design a valve with an optimized flow path. This significantly increases the Cv value when comparing the DIASTAR Six to traditionally designed diaphragm valves.

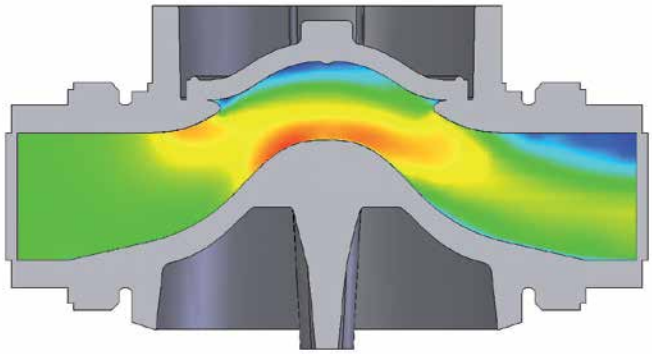

Dimensions

The following tables are shown in millimeters unless otherwise specified

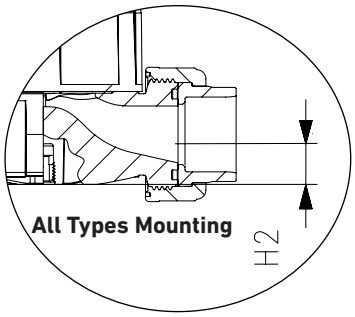

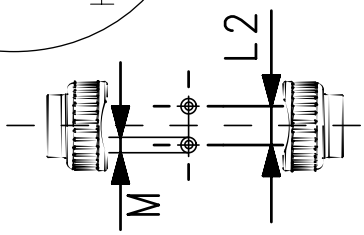

All Types Mounting Base

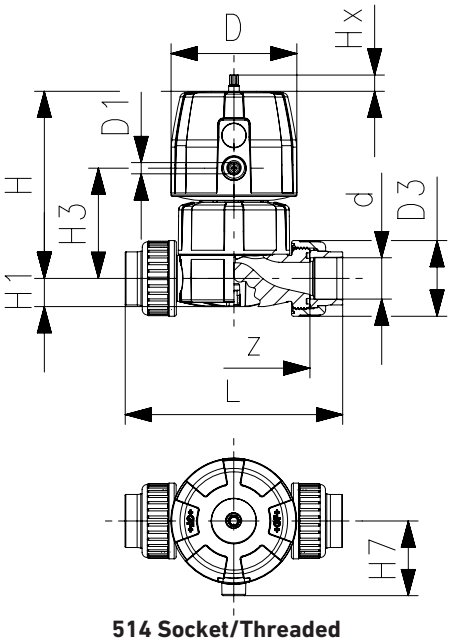

514 Socket/Threaded

All Types

Size	d (mm)	D	D1	L2	H	H1	H2	M	Hx
½	20	68	G⅛"	25	101	14	12	M6	7
¾	25	96	G⅛"	25	132	18	12	M6	10
1	32	96	G⅛"	25	143	22	12	M6	13
1¼	40	120	G⅛"	45	173	26	15	M8	14
1½	50	120	G⅛"	45	193	32	15	M8	16
2	63	120	G⅛"	45	205	39	15	M8	16

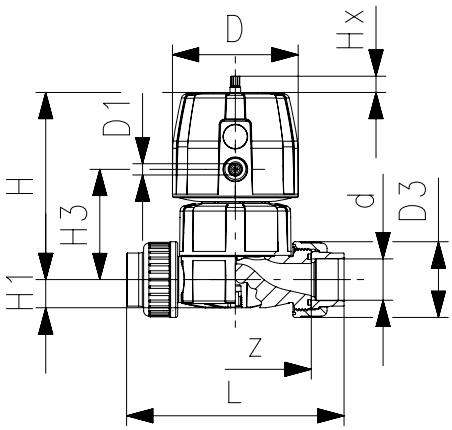

514 Socket/Threaded

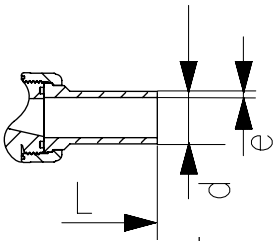

514 IR/Butt

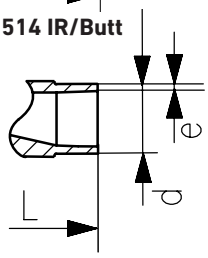

515 IR/Butt

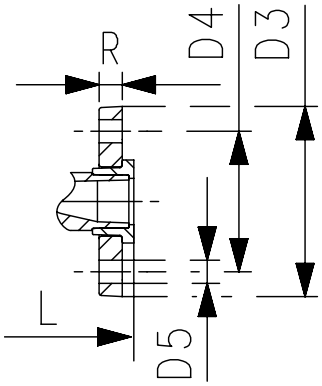

517 Flanged

Type 514 PVC/CPVC

	IPS Socket		Threaded NPT	
Size (inch)	L	z	L	z
½	136	96	128	94
¾	160	114	152	116
1	176	122	166	122
1¼	198	140	192	143
1½	232	160	222	176
2	268	190	266	218

Type 517 PVC/CPVC

	ANSI Flanged				
Size (inch)	L	D3 (inch)	D4 (inch)	D5 (inch)	R (inch)
½	130	3.74	2.36	0.63	0.63
¾	150	4.13	2.76	0.63	0.67
1	160	4.53	3.11	0.63	0.71
1¼	180	5.51	3.5	0.63	0.63
1½	200	5.91	3.86	0.63	0.71
2	230	6.5	4.76	0.75	0.71

Type 514 PP

	Metric IR/Butt		Metric Socket		Threaded NPT	
d(mm)	L	e	L	z	L	z
20	196	1.9	128	100	132	98
25	221	2.3	150	118	154	118
32	234	2.9	162	126	172	128
40	260	3.7	184	144	196	148
50	284	4.6	210	164	222	176
63	321	5.8	248	194	266	218

Type 515 PP

	Metric IR/Butt	
d(mm)	L	e
20	124	1.9
25	144	2.3
32	155	2.9
40	176	3.7
50	193	4.6
63	223	5.8

Type 517 PP

Size	ANSI Flanged				
(inch)	L	D3 (inch)	D4 (inch)	D5 (inch)	R (inch)
½	130	3.74	2.36	0.63	0.63
¾	150	4.13	2.76	0.63	0.67
1	160	4.53	3.11	0.63	0.71
1¼	180	5.51	3.5	0.63	0.63
1½	200	5.91	3.86	0.63	0.71
2	230	6.5	4.76	0.75	0.71

Type 514 ABS

	Metric Socket	
d(mm)	L	z
20	128	96
25	152	114
32	166	122
40	192	140
50	222	160
63	266	190

Pneumatically Actuated Diaphragm Valve

DIASTAR Ten and TenPlus

General

- **Size**: ½"–2"
- **Material**: PVC, CPVC, PROGEF® Standard® PP, PROGEF® Natural PPn, ABS, SYGEF® Standard PVDF, SYGEF® Plus PVDF-HP
- **Diaphragm**: EPDM, FPM, NBR, PTFE/EPDM, PTFE/FPM, PTFE-HP/EPDM, PTFE-HP/FPM
- **Actuator Housing**: Glass-filled PP
- **End Connection**: Solvent cement socket, threaded, flanged, fusion spigot union, fusion socket union, fusion spigot
- **Action**: FC, FO, DA
- **Top Works**: Threaded connection to valve body
- **Standard Pack Quantity**: 1 valve

Key Certifications

- **FDA CFR 21 177.1520**: PP and PVDF
- **FDA CFR 21 177.2600**: EPDM and FPM
- **FDA CFR 21 177.1550**: PTFE
- **USP 25 Class VI (physiological non-toxic)**: PP and PVDF

Sample Specification

The DIASTAR Ten and Ten Plus Valves shall be available in fail-safe to close, fail-safe to open and double acting configurations. The actuator housing shall be fully molded glass-filled polypropylene. The pneumatic connection shall be threaded BSP. The actuator bonnet to valve body connection shall be threaded with permanent markings on both the bonnet and body to ensure proper diaphragm compression. The diaphragm material shall be indicated by a color specific insert. Diaphragms of PTFE material shall have an elastomeric backing. The stroke shall be indicated by a graduated indicator. ANSI flanged versions shall meet ANSI B16.5 150lb standards. All valves shall be tested in accordance to ISO9393 and designed to ISO16138 standards. All valves shall be manufactured under ISO9001 for Quality and ISO14001 for Environmental Management. Following assembly, every valve shall be tested and certified bubble tight exceeding Class VI standards.

Material Specification

PVC valves shall meet ASTM D1784 cell classification 12454 standards. CPVC valves shall meet ASTM D1784 cell classification 23447-B standards. PP valves shall meet ASTM D5847-14 cell classification PP0510B66851 standards. ABS valves shall meet ASTM D3965 cell classification 42222 standards. PVDF valves shall be type 1, grade 2 according to ASTM D3222 standards. Valves of all materials shall be RoHS compliant.

Optional Features

- **Pilot Valve**: 24VAC/DC, 110VAC, 2303VAC
- **Positioner**: Digital electro-pneumatic
- **Limit Switches**: Mechanical, inductive
- **High Pressure**: 232 psi max PVC, CPVC, PVDF (water only applications)
- **End Connection**: Alternatives available upon request
- **Face Seals**: Alternatives available upon request
- **Cleaned**: Silicone free/oil free

Pressure Rating

DIASTAR Ten: The combined upstream and downstream process line pressures shall not exceed 150psi when the valve is closed. The process line pressure shall not exceed 150psi when the valve is open.

DIASTAR TenPlus: The upstream and downstream process line pressures shall not individually exceed 150psi when the valve is closed. The process line pressure shall not exceed 150psi when the valve is open.

Technical Data

Pressure Temperature Curves

The following graphs are based on a 25 year lifetime water or similar media application

PVC

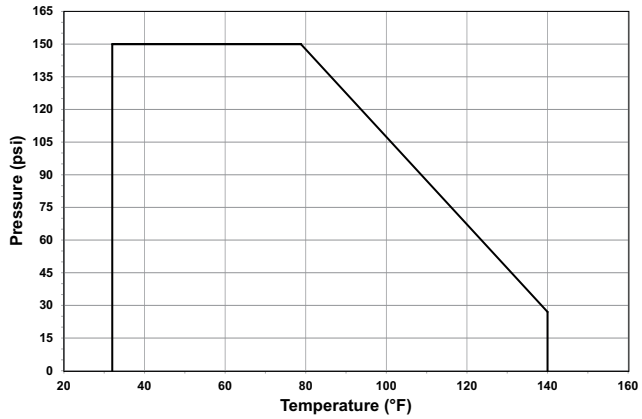

CPVC

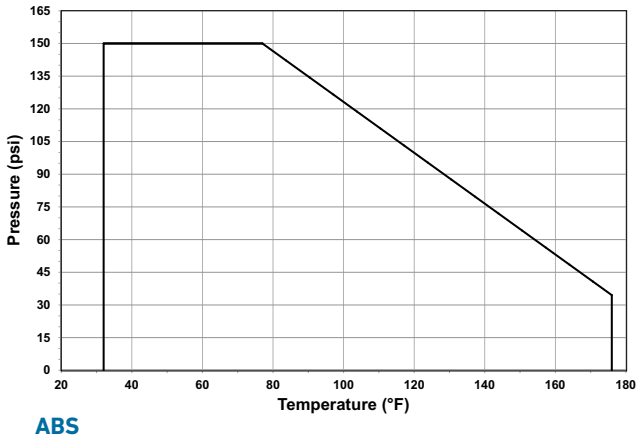

PP/PPn

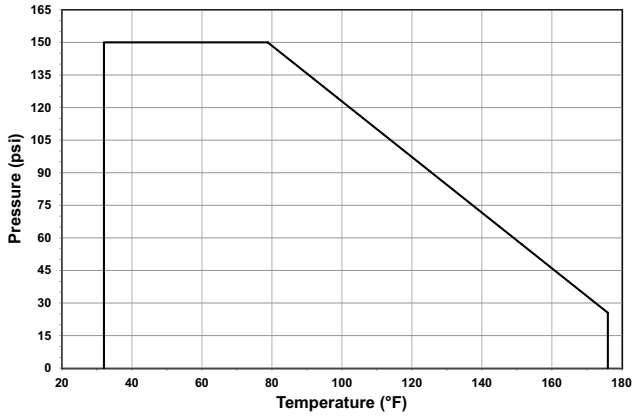

ABS

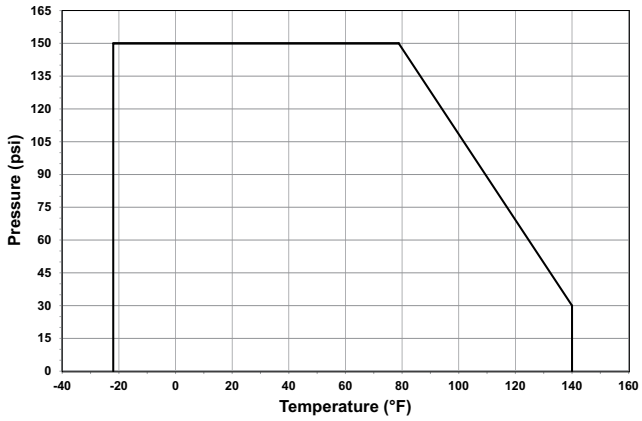

Pressure Temperature Curves

The following graphs are based on a 25 year lifetime water or similar media application

PVDF

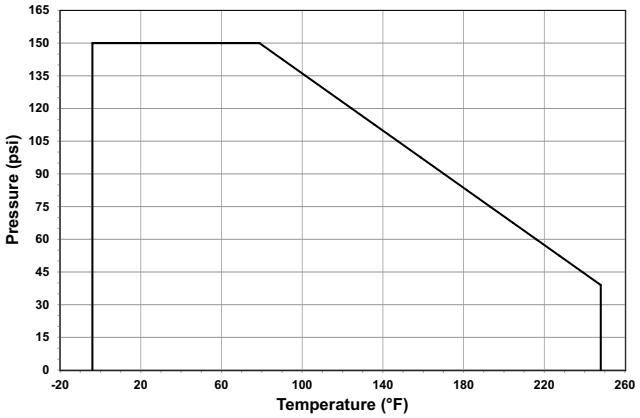

Pressure-Temperature

Material	Temperature Range (°F)	Max Pressure (psi)
PVC	32 to 140	150
CPVC	32 to 176	150
PP/PPn	32 to 176	150
ABS	-40 to 140	150
PVDF	-4 to 284	150

Vacuum Service

DIASTAR Ten and TenPlus Valves are not rated for full vacuum service. Maximum differential pressure of 7.5 psi at 122°F.

Flow

The following information is based on water applications at 68° F

Flow Characteristics 2-way

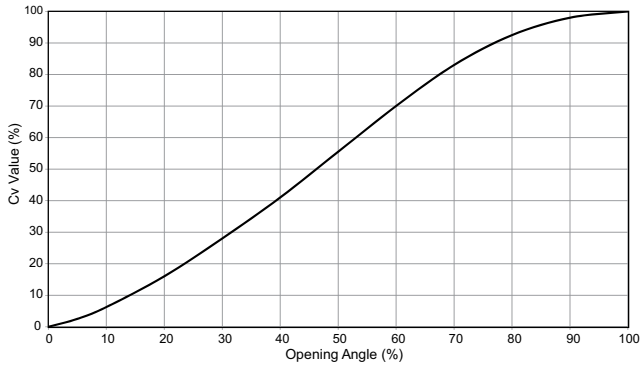

Flow Characteristics Type 519

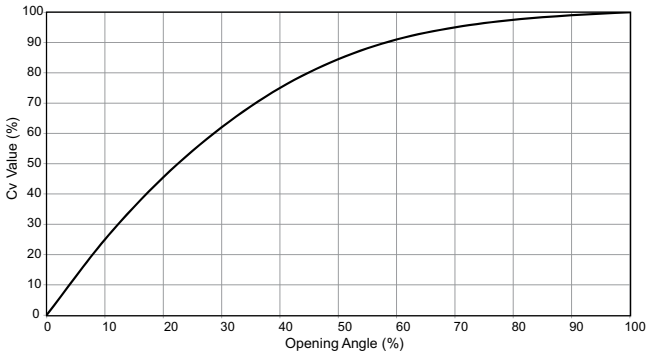

Cv Value - 2-Way

Size (inch)	d (mm)	Cv (gal/min)
½	20	8.4
¾	25	18.3
1	32	32.5
1¼	40	51.3
1½	50	85.3
2	63	116.8

Cv Value - Zero Static

Main (mm)	Branch (mm)	Cv (gal/min)
20	20	3.9
25	20	6.0
25	25	8.0
32	20	5.4
32	25	7.1
32	32	15.6
40	20	5.7
40	25	8.0
40	32	10.3
40	40	12.6
50	20	5.8
50	25	10.8
50	32	13.9
50	40	35.4
50	50	45.1
63	20	5.7
63	25	10.1
63	32	12.4
63	40	31.8
63	50	41.2
63	63	50.5
90	20	5.7
90	25	7.2
90	32	9.0
90	50	43.6
90	63	48.7
110	20	5.5
110	25	7.2
110	32	9.2
110	50	42.3
110	63	46.3

Dimensions

The following tables are shown in millimeters unless otherwise specified

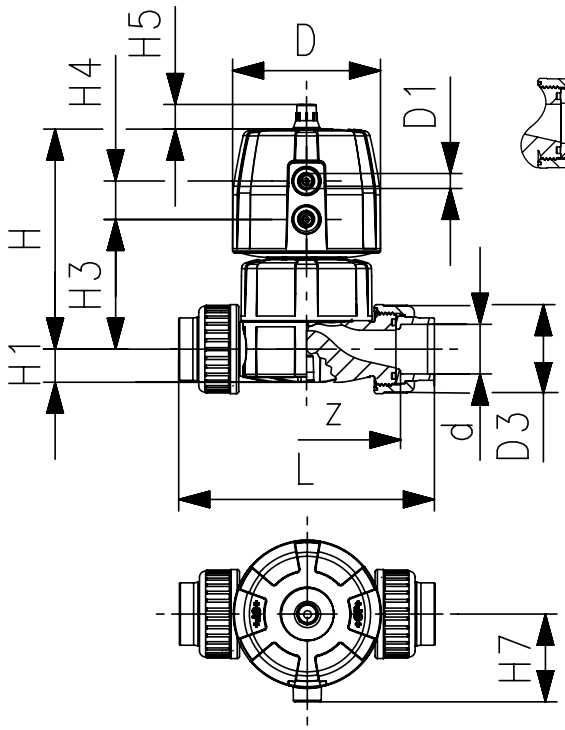

514 Socket/Threaded

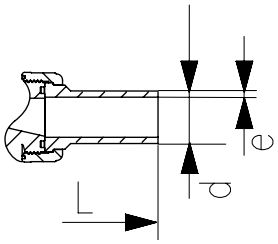

514 IR/Butt

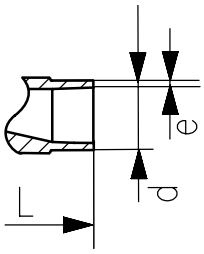

515 IR/Butt

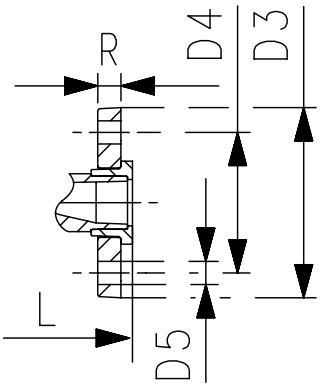

517 Flanged

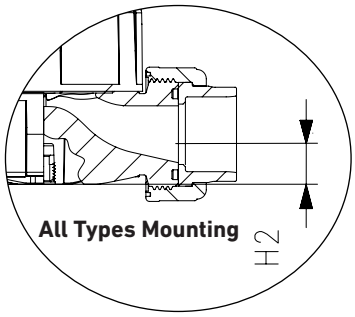

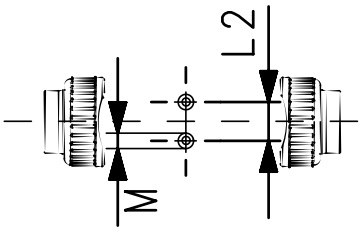

All Types Mounting Base

All Types and Materials

Size (inch)	d (mm)	D3	L2	H1	H2	M	Hx
½	20	43	25	14	12	M6	7
¾	25	51	25	18	12	M6	10
1	32	58	25	22	12	M6	13
1¼	40	72	45	26	15	M8	15
1½	50	83	45	32	15	M8	19
2	63	100	45	39	15	M8	23

DIASTAR Ten All Materials

Size (inch)	d (mm)	D	D1	H	H3	H4	H7
½	20	68	G⅛"	101	60	24	43
¾	25	96	G⅛"	132	73	25	57
1	32	96	G⅛"	143	84	25	57
1¼	40	120	G⅛"	173	99	26	69
1½	50	150	G¼"	214	119	36	88
2	63	150	G¼"	226	132	36	88

DIASTAR TenPlus All Materials

Size (inch)	d (mm)	D	D1	H	H3	H4	H7
½	20	96	G⅛"	127	68	25	57
¾	25	96	G⅛"	132	73	25	57
1	32	120	G⅛"	167	93	26	69
1¼	40	150	G¼"	196	101	36	88
1½	50	180	G¼"	239	124	37	103
2	63	180	G¼"	251	137	37	103

Type 514 PVC/CPVC

	IPS Socket		Threaded NPT	
Size (inch)	L	z	L	z
½	141	96	128	96
¾	163	114	152	114
1	176	122	166	122
1¼	204	140	192	140
1½	230	160	222	160
2	268	190	266	190

Type 517 PVC/CPVC

Size	ANSI Flanged				
(inch)	L	D3 (inch)	D4 (inch)	D5 (inch)	R (inch)
½	130	3.74	2.36	0.63	0.63
¾	150	4.13	2.76	0.63	0.67
1	160	4.53	3.11	0.63	0.71
1¼	180	5.51	3.5	0.63	0.63
1½	200	5.91	3.86	0.63	0.71
2	230	6.5	4.76	0.75	0.71

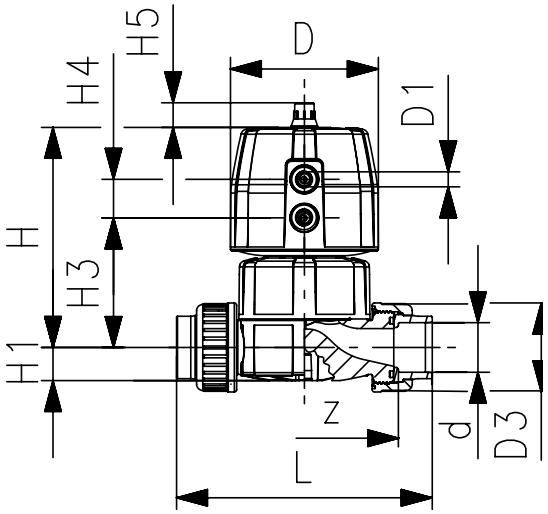

514 Socket/Threaded

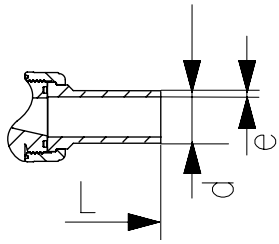

514 IR/Butt

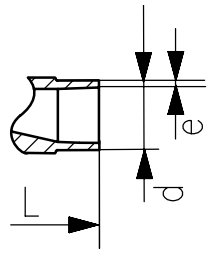

515 IR/Butt

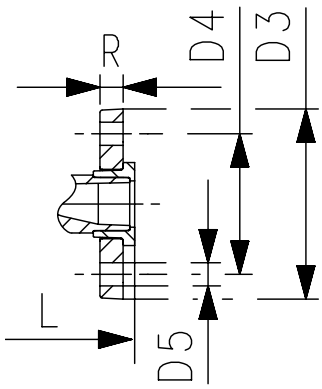

517 Flanged

Type 514 ABS

	Metric Socket	
d(mm)	L	z
20	128	96
25	152	114
32	166	122
40	192	140
50	222	160
63	266	190

Type 517 ABS

	ANSI Flanged				
Size (inch)	L	D3 (inch)	D4 (inch)	D5 (inch)	R (inch)
½	130	3.74	2.36	0.63	0.63
¾	150	4.13	2.76	0.63	0.67
1	160	4.53	3.11	0.63	0.71
1¼	180	5.51	3.5	0.63	0.63
1½	200	5.91	3.86	0.63	0.71
2	230	6.5	4.76	0.75	0.71

Type 514 PP

	Metric IR/Butt		Metric Socket		Threaded NPT	
d(mm)	L	e	L	z	L	z
20	196	1.9	128	100	132	98
25	221	2.3	150	118	154	118
32	234	2.9	162	126	172	128
40	260	3.7	184	144	196	148
50	284	4.6	210	164	222	176
63	321	5.8	248	194	266	218

Type 515 PP

	Metric IR/Butt	
d(mm)	L	e
20	124	1.9
25	144	2.3
32	155	2.9
40	176	3.7
50	193	4.6
63	223	5.8

Type 517 PP

Size	ANSI Flanged				
(inch)	L	D3 (inch)	D4 (inch)	D5 (inch)	R (inch)
½	130	3.74	2.36	0.63	0.63
¾	150	4.13	2.76	0.63	0.67
1	160	4.53	3.11	0.63	0.71
1¼	180	5.51	3.5	0.63	0.63
1½	200	5.91	3.86	0.63	0.71
2	230	6.5	4.76	0.75	0.71

Type 517 PVDF

Size	ANSI Flanged				
(inch)	L	D3 (inch)	D4 (inch)	D5 (inch)	R (inch)
½	130	3.74	2.36	0.63	0.63
¾	150	4.13	2.76	0.63	0.67
1	160	4.53	3.11	0.63	0.71
1¼	180	5.51	3.5	0.63	0.63
1½	200	5.91	3.86	0.63	0.71
2	230	6.5	4.76	0.75	0.71

Type 514 PVDF

	Metric IR/Butt		Metric Socket		Threaded NPT	
d(mm)	L	e	L	z	L	z
20	196	1.9	128	100	132	98
25	220	1.9	150	118	154	118
32	234	2.4	162	126	172	128
40	258	2.4	184	144	196	150
50	284	3.0	210	164	222	176
63	320	3.0	248	194	266	218

Type 515 PVDF

	Metric IR/Butt	
d(mm)	L	e
20	124	1.9
25	144	1.9
32	155	2.4
40	176	2.4
50	193	3.0
63	223	3.0

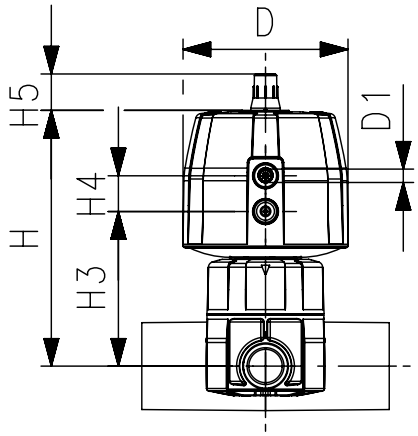

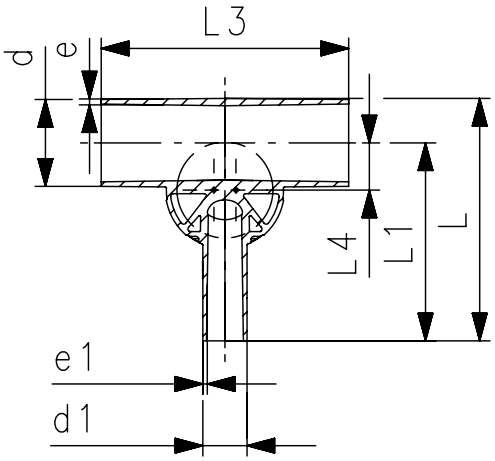

Zero Static

d-d1	Valve					PVDF		PP/PPn	
(mm)	(mm)	L	L1	L3	L4	e	e1	e	e1
20-20	20	117	96	162	12	1.9	1.9	1.9	1.9
25-20	25	133	108	162	16	1.9	1.9	2.3	1.9
25-25	25	133	108	162	16	1.9	1.9	2.3	2.3
32-20	25	142	120	162	19	2.4	1.9	2.9	1.9
32-25	25	142	120	162	19	2.4	1.9	2.9	2.3
32-32	32	145	120	160	19	2.4	2.4	2.9	2.9
40-20	32	149	128	180	23	2.4	1.9	3.7	1.9
40-25	32	149	128	180	23	2.4	1.9	-	-
40-32	32	149	128	180	23	2.4	2.4	-	-
40-40	32	174	153	180	23	2.4	2.4	3.7	3.7
50-20	25	160	134	180	27	3.0	1.9	4.6	1.9
50-25	32	160	134	180	28	3.0	1.9	4.6	2.3
50-32	32	160	134	180	28	3.0	2.4	4.6	2.9
50-40	63	209	169	209	33	3.0	2.4	-	-
50-50	63	209	169	209	33	3.0	3.0	-	-
63-20	25	177	144	180	33	3.0	1.9	5.8	1.9
63-25	32	177	144	180	35	3.0	1.9	5.8	2.3
63-32	32	177	144	180	35	3.0	2.4	5.8	2.9
63-40	63	225	192	220	39	3.0	2.4	-	-
63-50	63	225	192	220	39	3.0	3.0	-	-
63-63	63	225	192	220	39	3.0	3.0	-	-
90-20	32	205	159	190	47	4.3	1.9	-	-
90-25	32	205	159	190	47	4.3	1.9	-	-
90-32	32	205	159	190	47	4.3	2.4	-	-
90-50	63	254	207	250	51	4.3	3.0	-	-
90-63	63	254	207	250	51	4.3	3.0	-	-
110-20	32	227	171	190	56	5.3	1.9	-	-
110-25	32	227	171	190	56	5.3	1.9	-	-
110-32	32	227	171	190	56	5.3	2.4	-	-
110-50	63	276	219	250	60	5.3	3.0	-	-
110-63	63	276	219	250	60	5.3	3.0		

Pneumatically Actuated Diaphragm Valve

DIASTAR 025

General

- **Size**: 2½"–6"
- **Material**: PVC, CPVC, PROGEF® Standard PP, SYGEF® Standard PVDF, SYGEF® Plus PVDF-HP
- **Diaphragm**: EPDM, FPM, NBR, CSM, PTFE/EPDM, PTFE/FPM, PTFE-HP/EPDM, PTFE-HP/FPM
- **Actuator Housing**: Glass-filled PP
- **End Connection**: ANSI 150lb flange
- **Action**: FC, FO, DA
- **Top Works**: Bolted connection to valve body
- **Standard Pack Quantity**: 1 valve

Key Certifications

- **FDA CFR 21 177.1520**: PP and PVDF
- **FDA CFR 21 177.2600**: EPDM and FPM
- **FDA CFR 21 177.1550**: PTFE
- **USP 25 Class VI (physiological non-toxic)**: PP and PVDF

Definition of Connection Type

- **2½" (d75)**: Spigot body with fused flange adapter and loose flange ring
- **3" - 6" (d90 - d160)**: Fully molded body with integrated fixed flange

Sample Specification

The DIASTAR 025 shall be rated for bidirectional pressure. The valve body shall be a fully molded, single piece fixed flange design. The actuator shall be fully molded glass-filled polypropylene and available in fail-safe to close, fail-safe to open and double acting configurations. The stroke shall be indicated by an optical indicator. The body to actuator connection shall be of square type, utilizing metal body bolts. The pilot solenoid connection shall be of NAMUR type. DIASTAR 025 ANSI versions shall meet ANSI B16.5 150lb standards. All valves shall be tested in accordance to ISO9393 and designed to ISO16136 standards. All valves shall be manufactured under ISO9001 for Quality and ISO14001 for Environmental Management. Following assembly, every valve shall be tested and certified bubble tight exceeding Class VI standards. PVC valves shall meet ASTM D1784 cell classification 12454 standards. CPVC valves shall meet ASTM D1784 cell classification 23447-B standards. PP valves shall meet ASTM D5847-14 cell classification PP0510B66851 standards. PVDF valves shall be type 1, grade 2 according to ASTM D3222 standards. Valves of all materials shall be RoHS compliant.

Optional Features

- **Pilot Valve**: 24VAC/DC, 110VAC, 2303VAC
- **Positioner**: Digital electro-pneumatic
- **Limit Switches**: Mechanical, inductive
- **Stroke**: Limiter/manual override
- **Material**: ABS
- **Hardware**: Alternatives available upon request
- **End Connection**: ISO/DIN flange, union
- **Cleaned:** Silicone/oil free

Material Availability

Material	Range (inch)	Range (mm)
PVC	2-6	75-160
CPVC	2-4	75-110
PP	2-6	75-160
PVDF	2-6	75-160

Diaphragm Availability

Material	Range (inch)	Range (mm)
EPDM	2-6	75-160
FPM	2-6	75-160
NBR	2-6	75-160
CSM	2-6	75-160
PTFE/EPDM	2-6	75-160
PTFE/FPM	2-4	75-110
PTFE-HP/EPDM	2-6	75-160
PTFE-HP/FPM	2-4	75-110

Technical Data

Pressure-Temperature Curves

The following graphs are based on a lifetime of 25 years of water or similar media applications

PVC

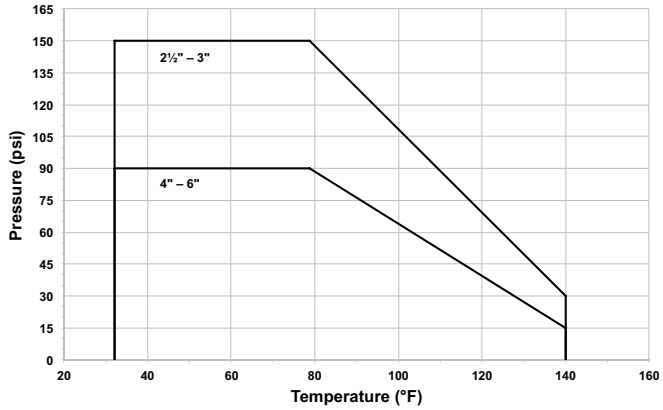

CPVC

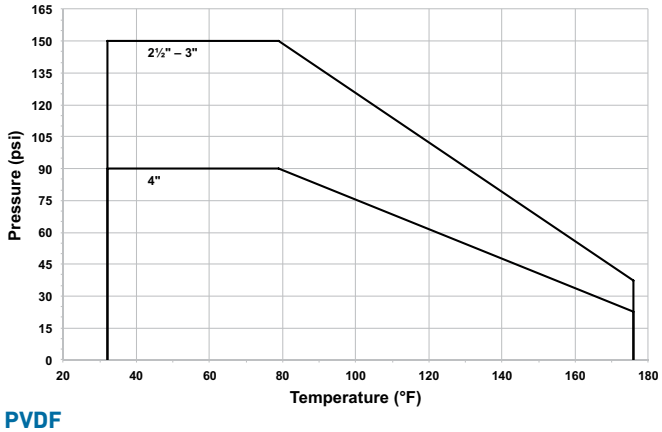

PP

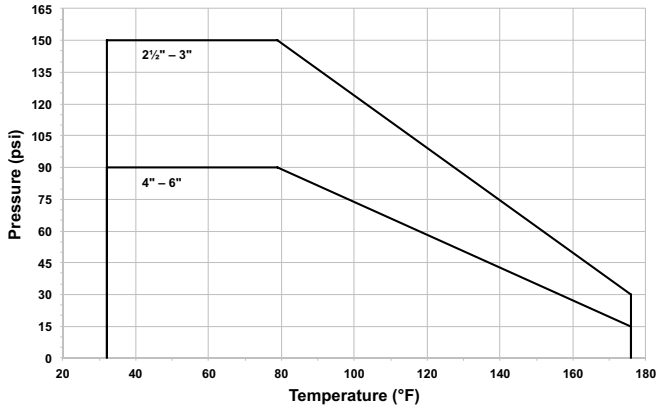

PVDF

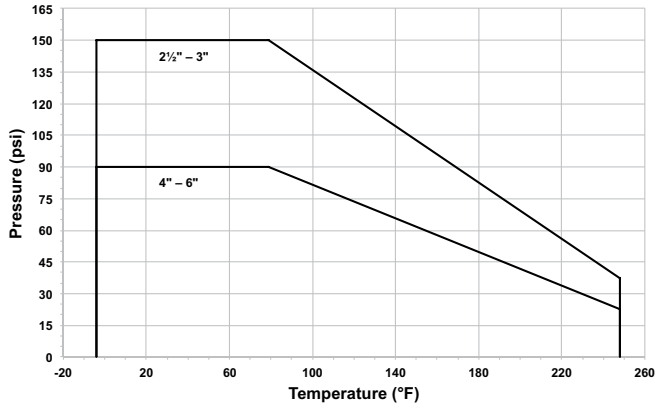

Pressure-Temperature

Material	Temperature Range (°F)	Max Pressure (psi)
PVC	32 to 140	150
CPVC	32 to 176	150
PP/PPn	32 to 176	150
ABS	-40 to 140	150
PVDF	-4 to 284	150

*Dependant on size as shown in P-T curves

Vacuum Service

DIASTAR 025 Valves are not rated for full vacuum service. Maximum differential pressure of 7.5 psi at 122°F.

Flow

The following information is based on water applications at 68° F

Flow Characteristics

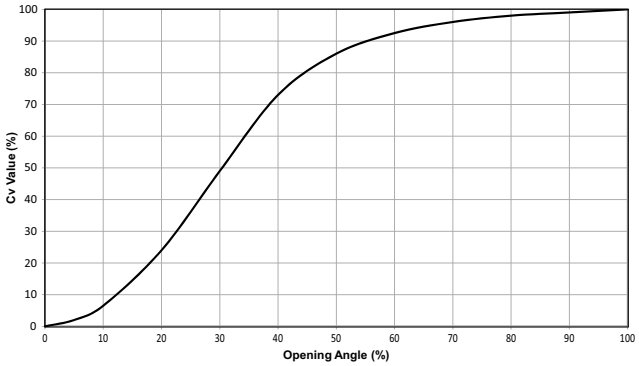

Cv Values

Size	Cv (gal/min)
2½	69.5
3	119.0
4	189.0
6	422.3

Control Media

The following information is based on applications at standard conditions

Volume

Size	FC (in^3)	FO (in^3)	DA Close (in^3)	DA Open (in^3)
2½	134	269	269	134
3	134	269	269	134
4	232	464	464	232
6	232	464	464	232

- 90 psi max. for FC actuators
- 75 psi max for FO or DA actuators
- Control media shall be compressed oil-free air or inert, non-aggressive gas
- 104°F max. temperature

Fail-Safe Close Elastomeric

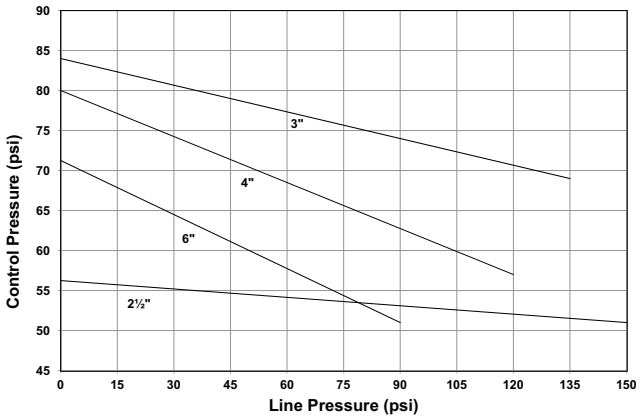

Fail-Safe Open/Double Acting Elastomeric and PTFE

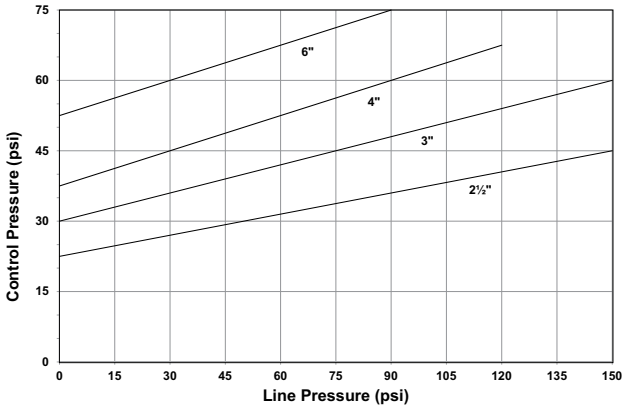

Fail-Safe Close PTFE

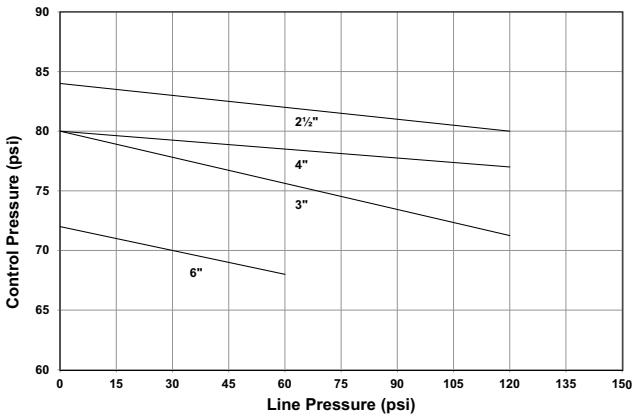

Components

Component	Description	Material
1	Indicator cap	SAN
2	Housing	Glass-filled PP
3	Position indicator	PPb
4	Piston seal	NBR
5	Spring	Galvanized steel
6	Piston	1.4104 stainless steel
7	Pressure plate	Galvanized steel
8	Actuator diaphragm	Polychloroprene
9	Compressor plate	Glass-fill PP
10	Compressor	Galvanized steel
11	Valve body	PVC, CPVC, PP, PVDF
12	Diaphragm	EPDM, FPM, NBR, CSM, PTFE

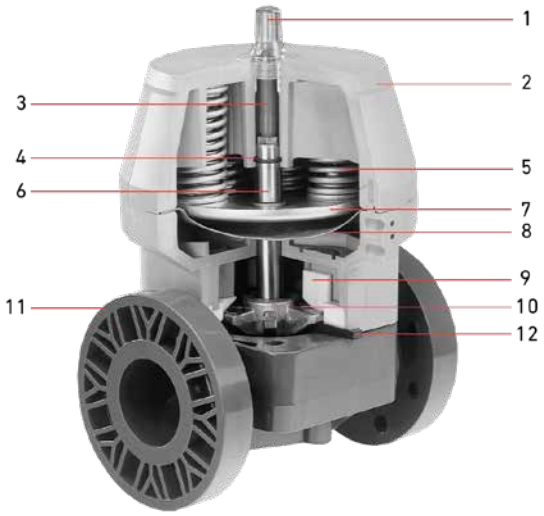

Dimensions

The following tables are shown in millimeters unless otherwise specified. Dimensions for ANSI B 16.5 Class 150 flanged valves shown, 3" and 6" (d90 and d160) are also compatible with DIN 2501 flanges.

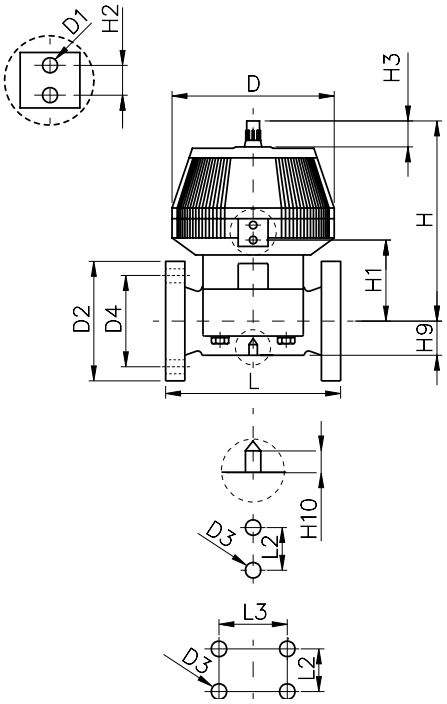

All Materials

Size (inch)	d (mm)	D	D1	D2	D3	D4 (inch)	H	H1
2½	75	280	G¼	185	M8	5.5	344	148
3	90	280	G¼	200	M12	6.3	348	150
4	110	335	G¼	225	M12	7.5	395	176
6	160	335	G¼	285	M12	9.5	455	237

All Materials

Size (inch)	d (mm)	H2	H3	H9	H10	L	L2	L3
2½	75	24	46	46	15	290	70	-
3	90	24	46	57	15	310	120	-
4	110	24	46	69	20	350	120	-
6	160	24	46	108	20	480	100	200

Weight

Size	d (mm)	PVC (lb)	CPVC (lb)	PP (lb)	PVDF (lb)
2½	75	29.9	29.9	30.1	31.2
3	90	38.3	39.6	35.2	41.1
4	110	54.3	54.3	50.2	58.3
6	160	77.0	-	73.5	84.0

Electro Pneumatic Positioner
DSR-500

General

- **Housing Material:** Polyamide
- **Ground Plate Material:** KTL-coated Aluminum
- **Wiring**: 4-wire logic
- **External Supply Voltage:** 24VDC±10%
- **Current Consumption:** 300mA max
- **Signal Input:** 4-20mA
- **Voltage of Working Resistance**: 3.5V @ 20mA
- **Stroke:** Linear, rotary
- **Actuator Action:** Fail-safe close
- **Manual Jog**: Push button
- **Temperature:** -4°F to 167°F
- **Pneumatic Port:** G1/8"
- **Conduit:** M16x1.5
- **Protection Class:** IP65

Sample Specification

The DSR-500 shall be an electro-pneumatic positioner with versions suitable for both rotary and linear strokes. The housing shall be polyamide with a KTL-coated Aluminum base plate. The input signal shall be either 4-20mA or 0-10V and manually spanned with the aide of push buttons on the positioner's display board.

Optional Features

- **Input Signal:** 0-10V
- **Actuator Action:** Fail-safe open, double acting
- **Protection Class:** Explosion proof
- **Position Feedback:** 4-20mA
- **Wiring:** 2-wire logic
- **Controller**: Integrated PID-process module
- **Optical**: With digital display

Special Note

All standard DSR 500 Positioners are programmed for fail-safe to close logic. These standard units can be reprogrammed by GF Piping Systems for fail-safe to open logic with special request. DSR 500 units can be built and programmed specifically for double acting logic with special request but this requires additional internal components, therefore all air-spring units cannot be converted to a double acting unit in the field .

Technical Data

Fail-safe to Close Control Medial Input

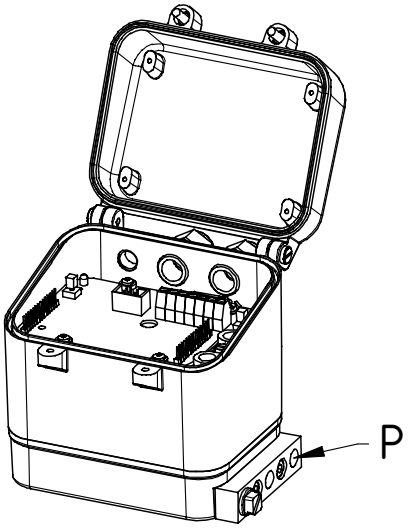

4-20mA Wiring

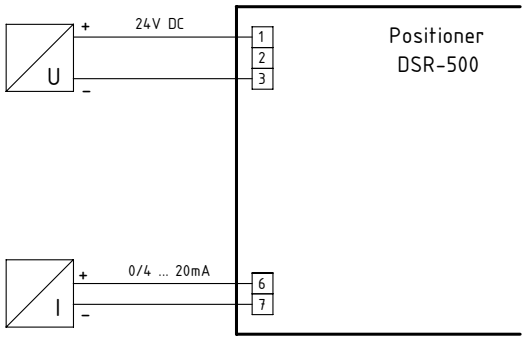

Optional 0-10V Wiring

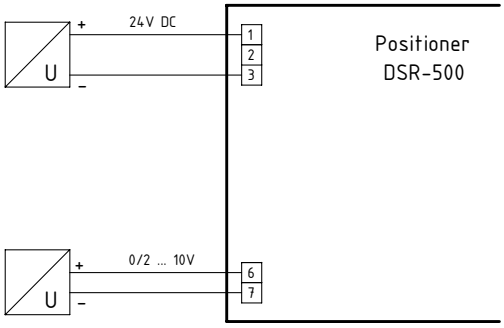

Optional Features Technical Data

Feedback Module

- **Supply Voltage:** 24VDC ±10%
- **Feedback:** Two limit signal transmitters
- **Switch Capacity of Transmitters:** 24VAC/DC, 70mA
- **Output Signal**: 4-20mA
- **Max. adm. Working Resistance**: <700 Ω
- **Switch Range**: Adjustable 0-100%
- **Hysteresis:** Approx. 2.5%
- **Temperature:** -4°F to 167°F

Feedback Module Switch Function

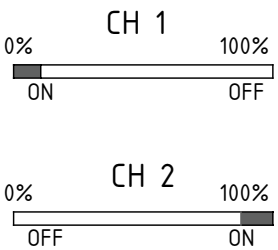

A feedback card can be added to any version of the DSR-500 product family. It is not certified to be used in explosion proof environments. If this card is installed on an ATEX certified DSR-500, the explosion proof rating of the positioner assembly is negated.

Feedback Module Wiring

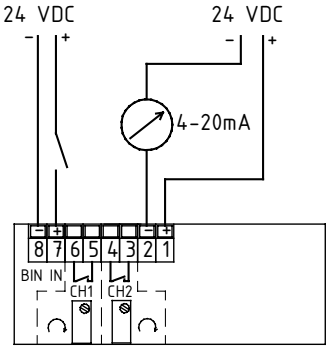

Optional Features Technical Data

The following features are available on DSR 500 rotatory units and those assembled with a 5-Series DIASTAR Valve

With Digital Display

- **Housing Material:** Polyamide
- **Ground Plate Material:** KTL-coated Aluminum
- **Wiring**: 2-wire logic
- **Signal Input:** 4-20mA
- **Voltage of Working Resistance**: 6.4V @ 20mA
- **Drive:** Linear, rotary
- **Actuator Action:** Fail-safe close, fail-safe open
- **Manual Jog**: Push button
- **Temperature:** -14°F to 167°F
- **Protection Class:** IP65

Wiring: With Digital Display and Explosion Proof

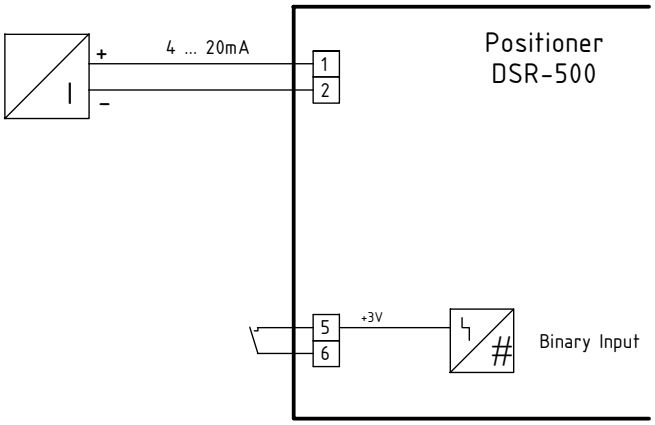

Explosion Proof

- **Housing Material:** Polyamide
- **Ground Plate Material:** KTL-coated Aluminum
- **Wiring**: 2-wire logic
- **Signal Input:** 4-20mA
- **Voltage of Working Resistance**: 14V @ 20mA
- **Max Input Voltage**: 30VDC
- **Max Input Current**: 100mA
- **Max Input Power**: 633mW
- **Drive:** Linear, rotary
- **Actuator Action:** Fail-safe close, fail-safe open
- **Manual Jog**: Push button
- **Specification**: ATEX II 1G Ex ia IIC T3/T4
- **Test Certificate**: BVS 08 ATEX E154
- **IEC Specification**: Ex ia IIC T3/T4 Ga
- **Temperature (T4):** -10°F to 104°F
- **Temperature (T3):** -10°F to 167°F

Key Design Feature

The DSR 500 with Digital Display offers convenient user friendly features that the standard unit does not. It operates with 2-wire logic, meaning the operator only has to hard wire the control signal to the unit versus the conventional 4-wire logic units that require both control signal and power wires to be routed directly to the positioner. The entire DSR eletro-pneumatic positioner family offers simplified setup and trouble shooting but the DSR 500 with Digital Display takes it a step further with a screen that allows an operator to see easy-to-read symbols that communicate the postioner's faults or current status. All DSR 500 units feature a manual jog function that allows an operator to manually open or close a valve directly from the postioner but units with digital display allow an operator to see exactly what degree of stroke the valve is currently oriented.

Display Examples

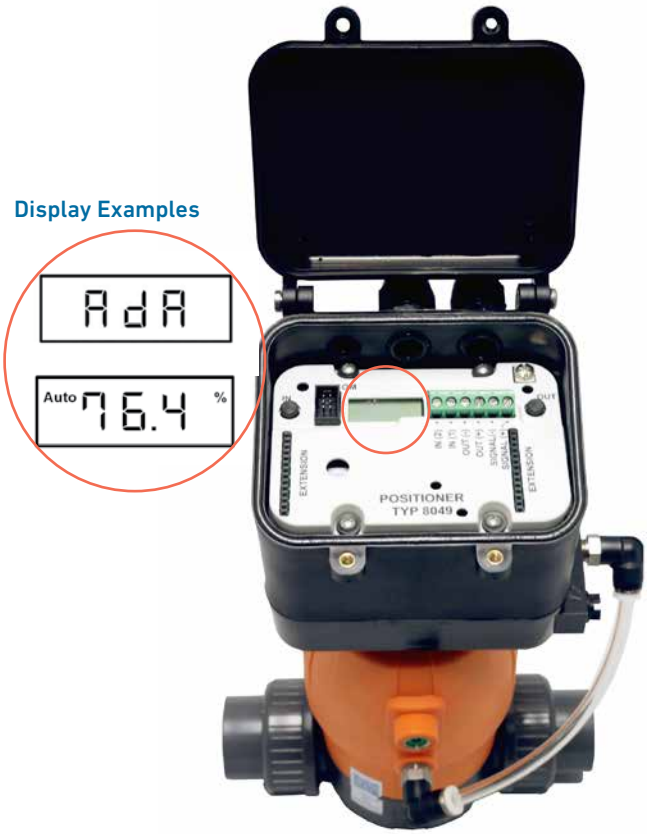

With Integrated PID Control Module

- **Housing Material:** Polyamide
- **Ground Plate Material:** KTL-coated Aluminum
- **Wiring**: 4-wire logic
- **External Supply Voltage:** 24VDC±10%
- **Current Consumption:** 350mA max (including positioner)
- **Process Value**: Pt100 (2 or 3 wire), 4-20mA
- **Set Point:** Internal (keys), external (4-20mA or 0-10V)
- **Control Function:** PID, PI, P or PD
- **Resolution**: ±0.12% of measuring range
- **Output Resolution**: ±0.1% of end value (100% opening)
- **Accuracy:** ≤0.5% of end value
- **Sampling Rate**: 50 msec for PI control
- **Refresh of Output Signal:** 1.8sec for D part
- **Input Filter Process Value:** Off, T=20 msec; Pt100: T=200msec, On, T=800msec (suppression line interference 54dB)
- **Drive:** Linear, rotary
- **Actuator Action:** Fail-safe close, fail-safe open, double acting
- **Manual Jog**: Push button
- **Temperature:** -4°F to 167°F
- **Protection Class:** IP65

Wiring: Standard Ix

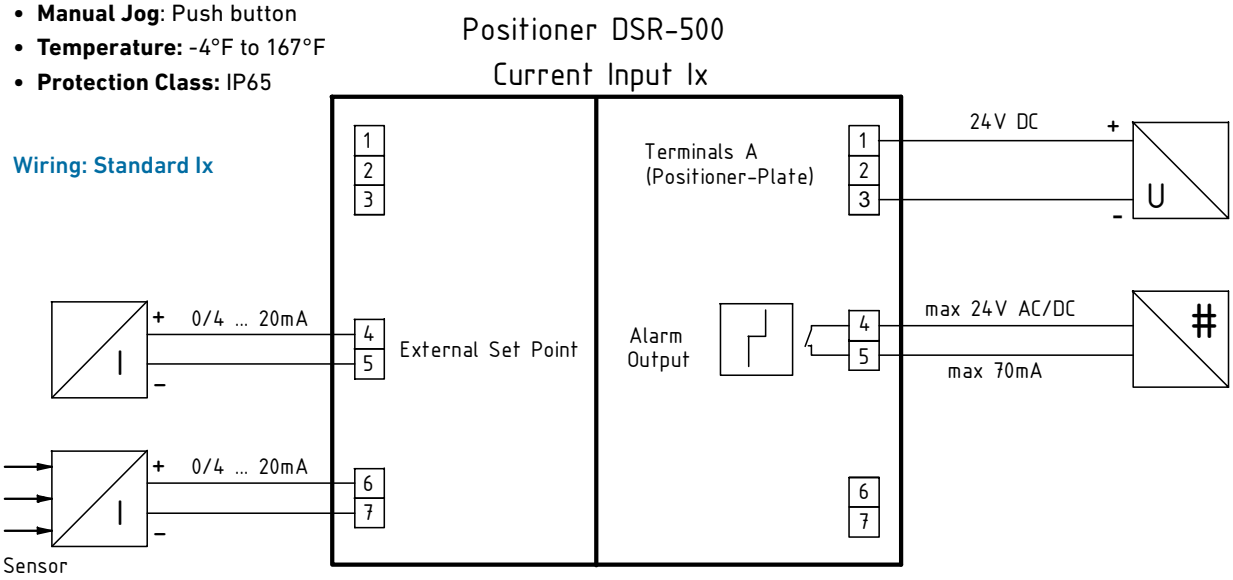

Wiring: Ix w/ Internal Supply

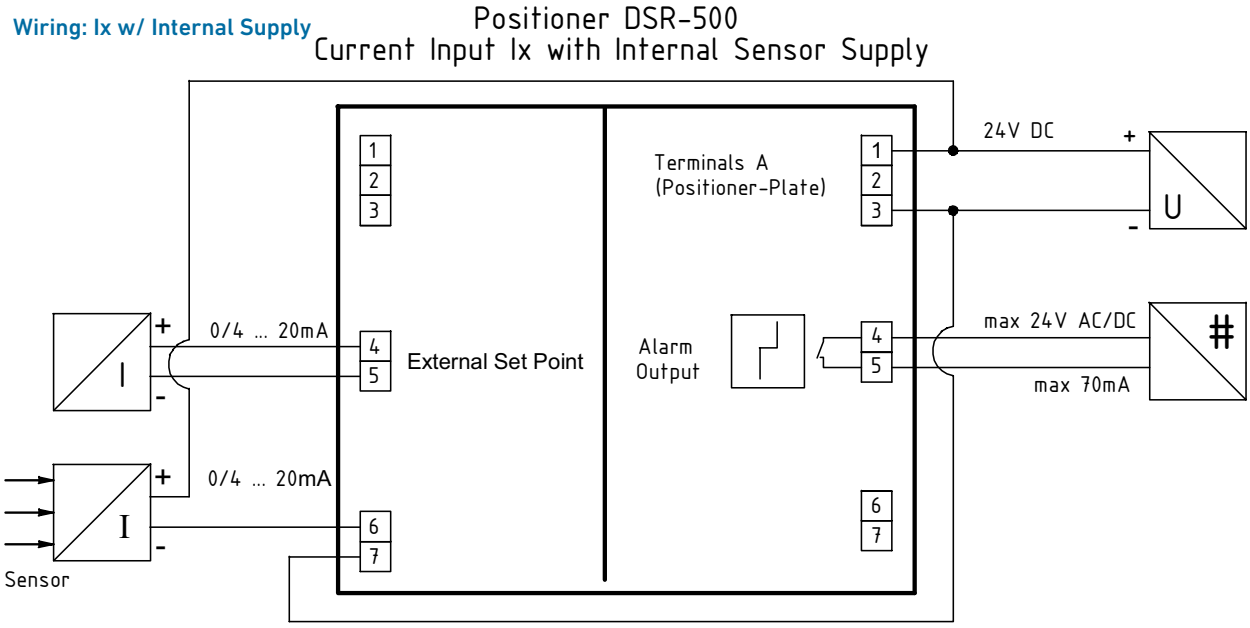

Wiring: Pt100 2-wire

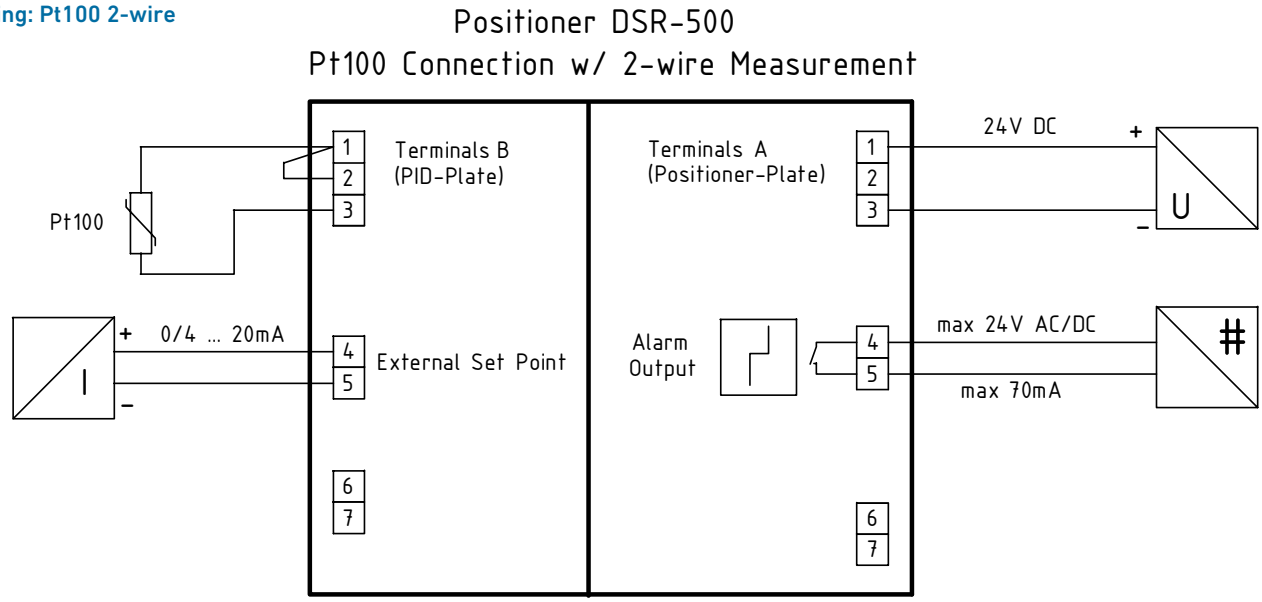

Wiring: Pt100 3-wire

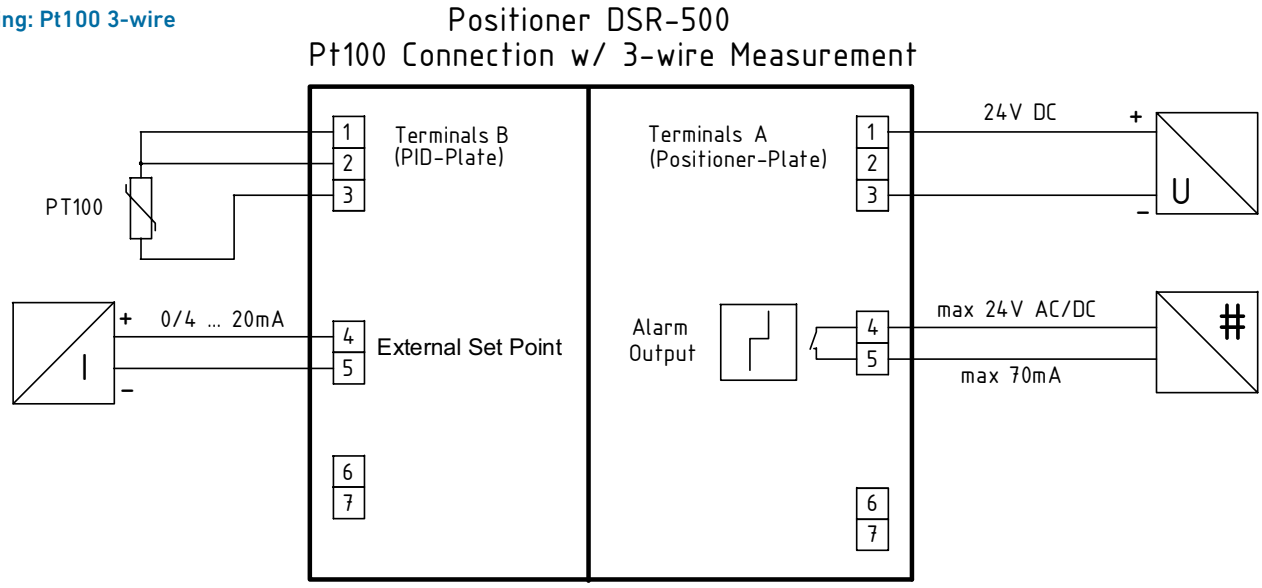

Controller Interface

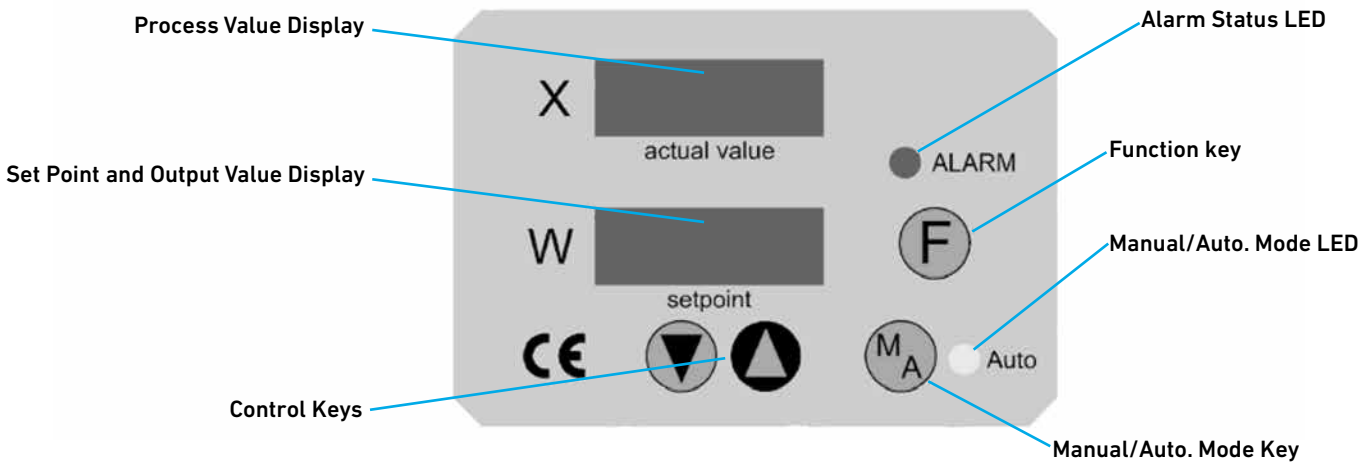

Mounting Options

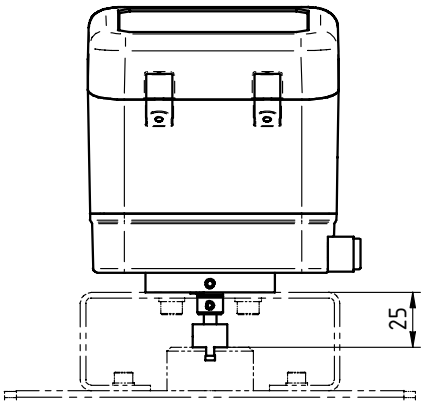

NAMUR Mounting Pad: Rotary positioners all utilize the same NAMUR compliant mounting pad if used with a GF pneumatic actuator. An operator can see the rotary position sensor for optical position indication.

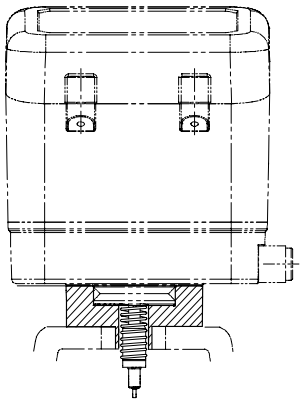

Without Optical Indicator: Linear positions can utilize a GF DIASTAR Valve specific mounting pad that lowers the overall footprint of the assembly but does not allow the user to see the position of the valve.

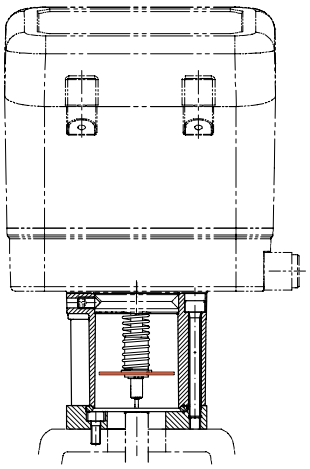

With Optical Indicator: Linear positions can utilize a GF DIASTAR Valve specific mounting pad that utilizes an orange colored disc on the sensing pin and a viewing window on the mounting pad to provide the user with an optical indicator.

Dimensions

The following dimensions are shown in millimeters unless otherwise specified

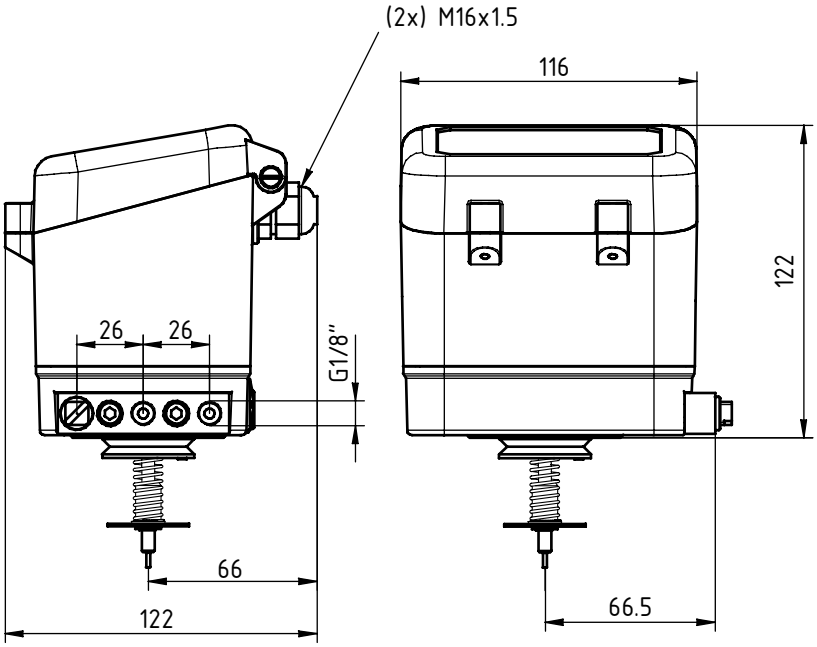

Linear version shown, all dimensions applicable to rotary versions.

Special Note: DIASTAR 025 Valve

The height of the positioner used with DIASTAR 025 Valves sizes 2½"–6" (d75–d110) is 166mm. This dimension is shown as 122mm in the drawing at left. All other dimensions identical.

DIASTAR Limit Switch
ER52-53

General

- **Cover:** Styrene Acrylonitrile (SAN)
- **Body**: PP
- **Seals**: NBR
- **Switch:** Mechanical, inductive
- **Mount**: Threaded direct
- **Base Material:** Brass
- **Sensing Pin Material:** Stainless steel
- **Sensing Pin Extensions:** Stainless steel
- **Cam Material:** PA
- **DIN Plug**: 3P + E, form A per DIN43650 (excluding ER 52/3-6)
- **Protection Class:** IP65

Conformity with Relevant Provision

- Machinery Directive 2006/42/EC
- Electromagnetic Compatibility Directive 2004/108/EC

Definition of Type

- **ER52:** DIASTAR Valves ½" - 2"
- **ER53:** DIASTAR Valves 2½" - 6"

Sample Specification

The Type ER52 and ER53 Limit Switch shall be used in conjunction with a DIASTAR Pneumatically Actuated Diaphragm Valve operating with open/close functionality. The DIN connector input shall utilize a cable gland with the exception of the ER52-6 and ER53-6 which shall be pre-wired and supplied with a 75 inch lead. The mount shall be direct to the DIASTAR actuator with the utilization of provided sensing pin extensions and threaded adapters. The sensing pin adapters shall be reverse threaded. The cams shall be of polyamide material of adjustable within the stroke limitations of the sensing pin. The cover to body connection shall be threaded and secured from backing off via a stainless steel machine screw. All variants shall be compatible for use in conjunction with a GF DIASTAR Stroke Limiter.

Mechanical Switch Technical Data

Mechanical Wiring

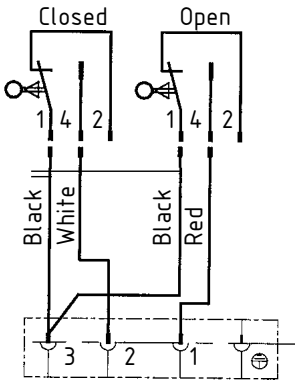

ER 52-1 (AgNi)

- **Valve Size:** ½" - 2" (d20 - d63)
- **Contact:** AgNi
- **Max Voltage:** 250VAC
- **Max Current:** 6A

ER 53-1 (AgNi)

- **Valve Size:** 2½" - 6" (d75 - d160)
- **Contact:** AgNi
- **Max Voltage:** 250VAC
- **Max Current:** 10A

ER 52-2 (Au)

- **Valve Size:** ½" - 2" (d20 - d63)
- **Contact:** Au
- **Max Voltage:** 4 - 30VDC
- **Max Current:** 1 - 100mA

ER 53-2 (Au)

- **Valve Size:** 2½" - 6" (d75 - d160)
- **Contact:** Au
- **Max Voltage:** 4 - 30VDC
- **Max Current:** 1 - 100mA

Inductive Switch Technical Data

ER 52-3 (NPN)

- **Valve Size:** ½" - 2" (d20 - d63)
- **Switch Type:** NPN
- **Max Voltage:** 10 - 30VDC
- **Max Current:** 100mA

ER 52-4 (PNP)

- **Valve Size:** ½" - 2" (d20 - d63)
- **Switch Type:** PNP
- **Max Voltage:** 10 - 30VDC
- **Max Current:** 100mA

ER 52 Inductive Wiring

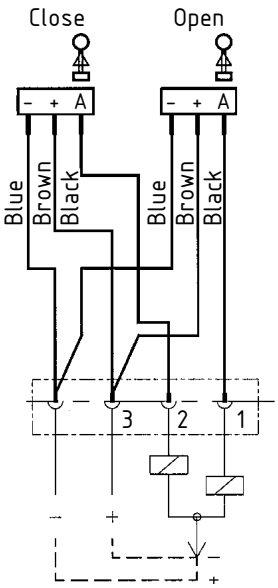

ER 53-3 (NPN)

- **Valve Size:** 2½" - 6" (d75 - d160)
- **Switch Type:** NPN
- **Max Voltage:** 9.6 - 55VDC
- **Max Current:** 200mA

ER 53-4 (PNP)

- **Valve Size:** 2½" - 6" (d75 - d160)
- **Switch Type:** PNP
- **Max Voltage:** 9.6 - 55VDC
- **Max Current:** 200mA

ER 53 Inductive Wiring

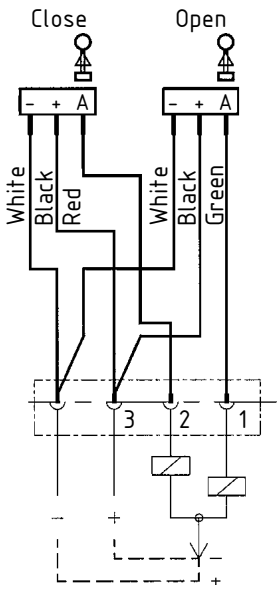

Intrinsically Safe Switch Technical Data

ER 52-5, ER 53-5

- **Switch:** PEPPERL+FUCHS Inductive Sensor
- **Valve Size:** ½" - 2" (d20 - d63)
- **Switch Type:** Inductive
- **Standard:** EN 60079-0:2012, EN 60079-11:2012
- **Hazardous Area:** PTB 00 ATEX 2032X
- **Device Category:** 2G; 1D
- **ATEX Protection:** II 2G Ex ia IIC T6...T1 Gb
- **Max Voltage:** 8VDC
- **Disengaged Current Consumption:** ≤ 1mA
- **Engaged Current Consumption:** ≥ 3mA
- **Temperature**: -13 to 212°F

ER 52-5

Valve Size: ½" - 2" (d20 - d63)

ER 53-5

- **Valve Size:** 2½" - 6" (d75 - d160)

ER 52-5 Wiring

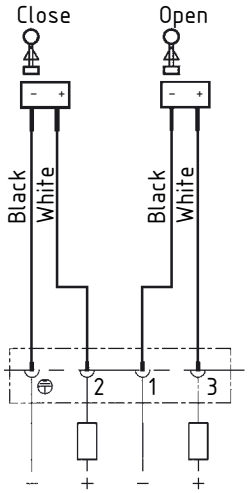

ER 53-5 Wiring

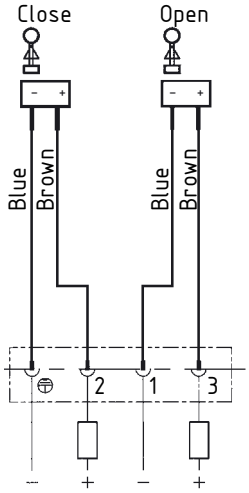

Explosion-Proof Switch Technical Data

ER 52-6

- **Valve Size:** 2½" - 6" (d75 - d160)

ER 53-6

Valve Size: ½" - 2" (d20 - d63)

ER 52-6, ER 53-6

- **Switch:** BARTEC Miniature Limit Switch
- **ATEX Explosion Protection:** II2G Ex d IIC T6, T5 Gb
- **ATEX Certification:** EPS 14 ATEX 1689X
- **IECEx Explosion Protection:** Ex d IIC Gb T6, T5
- **IECEx Certifcation:** IECEx EPS 140039X
- **Limit Switch Protection Class:** IP54
- **Lead Length:** 75 inches
- **Contact:** Ag
- **Max Voltage:** 250VAC
- **Max Current:** 5A
- **Temperature:** T5 max 194°F, T6 max 167°F

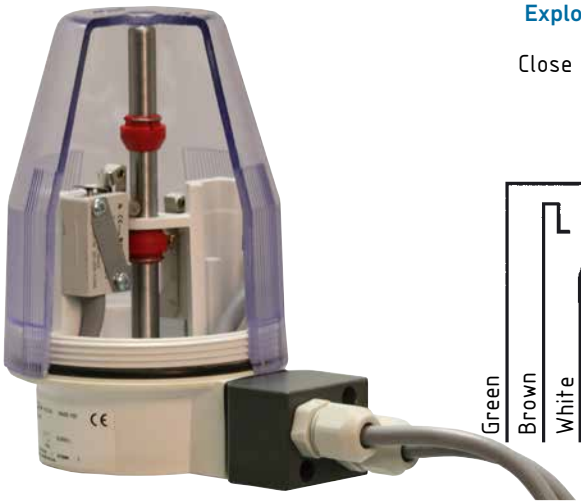

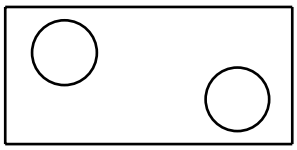

Explosion Proof Wiring

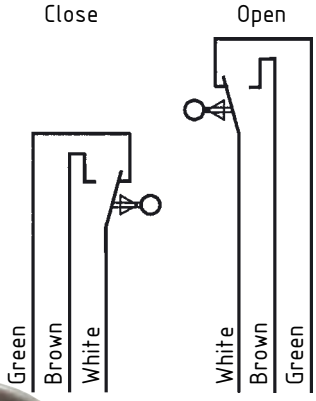

Dimensions

The following dimensions are shown in millimeters unless otherwise specified

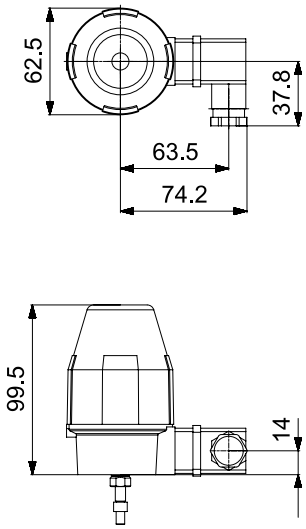

ER 52

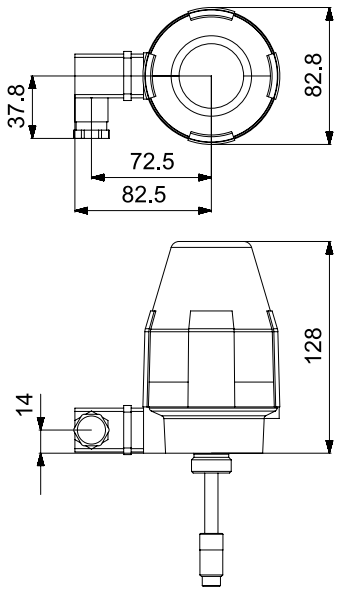

ER 53

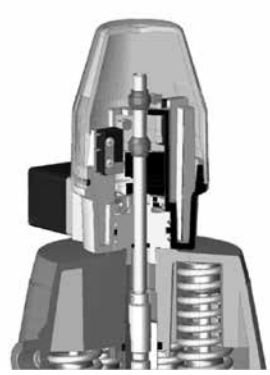

Mounting

ER52/53 Linear Switch Kits come with several adapters to accommodate a range of valve sizes. There are two types of adapters included in these kits: one connects to the sensing pin and the other adapts to the threaded port on the top of the actuator. All DIASTAR actuated valves utilize an optical position indicator. The ER52/53 Linear Switch Kits are design to utilize either the position indicator pin (if used with a stroke limiter/manual override) or the position indicator connector inside the actuator (if directly mounted as shown above) to move the ER52/53 sensing pin in order to determine the valve's position. The sensing pin adapters change the length of the sensing pin to accommodate the varying stroke lengths of different size actuators. During assembly, please note that DIASTAR position indicators are all reverse threaded. The size of threaded port on the top of 5-Series DIASTAR actuators varies depending on size and type. The male threaded connection on the base of the ER52 has two sides, one with a larger threaded connection and one with a smaller threaded connection. It can be removed from the switch housing and rotated to fit the female threaded port on the actuator.

Important Note: ER52/53 Linear Switch Kits are specifically designed for and should only be used with GF's DIASTAR Valves. DIASTAR 604/605 and DIASTAR Six versions cannot accommodate these switches.

Solenoid
Pilot Valve

General

- **Function**: 3/2 way, 5/2 way
- **Voltage:** 110VAC, 230VAC, 24VDC, 24VAC
- **Housing Material:** Polyamide, anodized aluminum, brass
- **Pressure:** 150psi
- **Protection Class:** IP65
- **Manual Override:** Integrated
- **Duty Cycle:** 100%
- **Mount:** Direct or NAMUR

Double Acting Pilot Valves

Valve Type	Size	Solenoid Type
230-233	All	PV5470
285-288	All	PV5470
240	All	PV5470
244	All	PV5470
DIASTAR 604/605	All	PV5470
DIASTAR Ten	All	PV5470
DIASTAR 025	All	PV5470

The above/right tables show the suggested pilot valve for each valve type offered by GF. Alternative models should be used if the operator desires faster or slower than standard cycle times.

Sample Specification

GF's Pilot Valve family shall be single coil solenoid valves and utilized with a GF pneumatically actuated valve. The actuator mount shall be either be direct or NAMUR compliant. The media shall be clean, dry compressed air. The protection class shall be IP65 and the duty cycle shall be 100 percent.

Spring Return Pilot Valves

Valve Type	Size	Solenoid Type
230-233	⅜"-2" (d16-d63)	PV94
230-233	2½"-4:	PV95
285-288	All	PV94
240	All	PV95
244	All	PV95
DIASTAR 604/605	All	PV95
DIASTAR Six	All	PV94
DIASTAR Ten	½"-1¼" (d20-d40)	PV94
DIASTAR Ten	1½"-2" (d50-d63)	PV95
DIASTAR TenPlus	½"-1" (d20-d32)	PV94
DIASTAR TenPlus	1¼"-2" (d40-d63)	PV95
DIASTAR 025	2½"-6" (d75-d160)	PV95

PV94

- **Function:** 3/2 ways
- **Voltage:** 110VAC, 230VAC, 24VDC, 24VAC
- **Voltage Tolerance:** ±10%
- **Pressure:** 150psi
- **Flowrate Air:** 49 in^3/s
- **Housing Material:** Polyamide
- **Banjo Bolt Material:** Nickel plated brass
- **Seal Material:** NBR
- **Manual Override:** Integrated
- **Duty Cycle:** 100%
- **DIN Plug:** DIN EN 175301-803 Form C
- **Coil Output:** 4W (AC/DC)
- **Startup Power:** 9VA (AC), 4W (DC)
- **Operation Power:** 6VA (AC), 4W (DC)
- **Response Time Open/Close:** 7-12 ms
- **Process Temperature:** 14 °F to 212°F
- **Ambient Temperature:** 14 °F to 131°F
- **Actuator Connection:** G⅛"
- **Weight:** 135 g
- **Protection Class:** IP65

PV95

- **Function:** 3/2 ways
- **Voltage:** 110VAC, 230VAC, 24VDC, 24VAC
- **Voltage Tolerance:** ±10%
- **Pressure:** 150psi
- **Flowrate Air:** 122 in^3/s
- **Housing Material:** Brass
- **Pneumatic Connector Material:** Anodized aluminum
- **Banjo Bolt Material:** Brass
- **Seal Material:** FPM
- **Manual Override:** Integrated
- **Duty Cycle:** 100%
- **DIN Plug:** DIN 43650 Form A
- **Coil Output:** 8W (AC/DC)
- **Startup Power:** 24VA (AC), 8W (DC)
- **Operation Power:** 17VA (AC), 8W (DC)
- **Response Time Open:** 18 ms
- **Response Time Close:** 22 ms
- **Process Temperature:** 14 °F to 212°F
- **Ambient Temperature:** 14 °F to 131°F
- **Actuator Connection:** G⅛" with adapter to G¼"
- **Weight:** 420 g
- **Protection Class:** IP65

PV94

PV95

Wiring

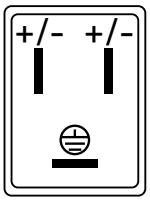

Note: No polarity

Dimensions

The following dimensions are shown in millimeters unless otherwise specified

PV94

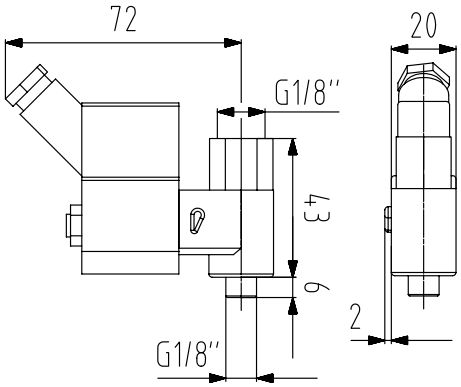

PV95

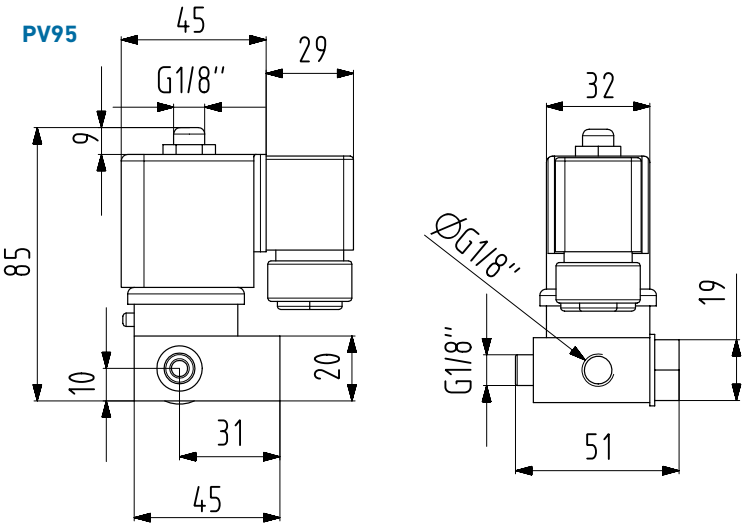

PV5470

- **Function:** 5/2 way
- **Design:** Single coil, spring return
- **Voltage:** 110VAC, 220VAC, 24VDC
- **Voltage Tolerance:** -15%/+10%
- **Pressure:** 150psi
- **Seal Material:** NBR
- **Manual Override:** Integrated
- **Duty Cycle:** 100%
- **Operation Power :** 5VA @ 60 Hz, 5.6VA @ 50Hz (AC)
- **Nonoperating Power:** 2.3VA @ 60 Hz, 3.4VA @ 50 Hz (AC)
- **Operating Power:** 1.8W (DC)
- **Temperature:** 14 °F to 140°F
- **Pneumatic Connection:** G¼"
- **Actuator Connection:** NAMUR compliant
- **Weight:** 320 g
- **Protection Class:** IP65

Control

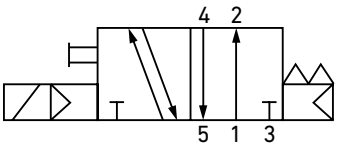

Wiring

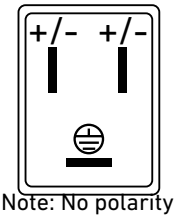

Note: No polarity

Optional Feature

The PV5470 is available with double coil functionality. Standard units utilize a single coil to move a piston to the active state and a spring to return it to the deactive state. The double coil replaces the spring with an additional coil and DIN plug.

Accessory

GF offers a pneumatic port NAMUR adapter to mount PV5470 and MLN532 pilot solenoid valves to actuators that are not NAMUR compliant. This adapter is compatible with every pneumatic actuator in the GF product line.

Dimensions

The following dimensions are shown in millimeters unless otherwise specified

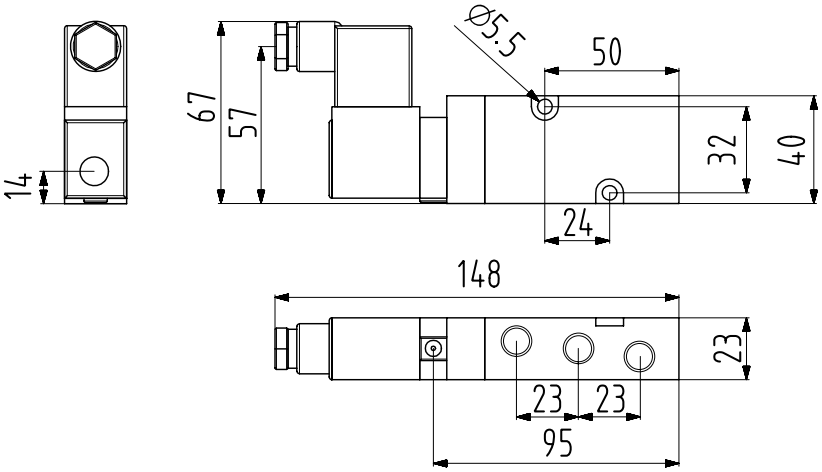

MLN532 Speed Control

- **Function:** 5/2 way and 3/2 ways
- **Speed Control:** Two port throttling valves
- **Design:** Single coil, spring return
- **Voltage:** 110VAC, 230VAC, 24VDC, 24VAC
- **Voltage Tolerance:** ±10%
- **Pressure:** 150psi
- **Flowrate Air:** 966 in^3/s
- **Housing Material:** Anodized aluminum
- **Banjo Bolt Material:** Nickel plated brass
- **Seal Material:** NBR
- **Manual Override:** Integrated
- **Duty Cycle:** 100%
- **Operation Power:** 5VA (AC), 3W (DC)
- **Response Time Open/Close:** 7-12 ms
- **Temperature:** 14 °F to 122°F
- **Pneumatic Connection:** G¼"
- **Actuator Connection:** NAMUR compliant
- **Protection Class:** IP65

5/2 way

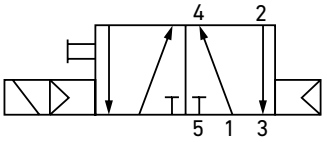

3/2 way

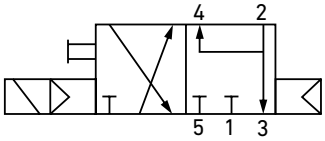

Control

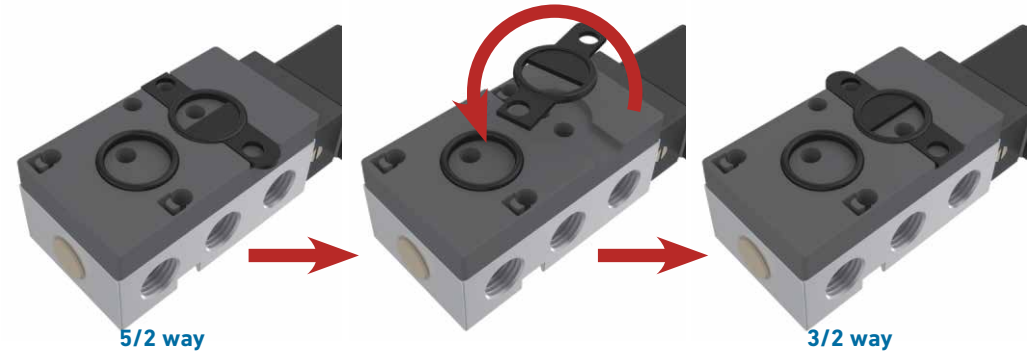

5/2 way

3/2 way

Wiring

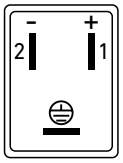

Dimensions

The following dimensions are shown in millimeters unless otherwise specified

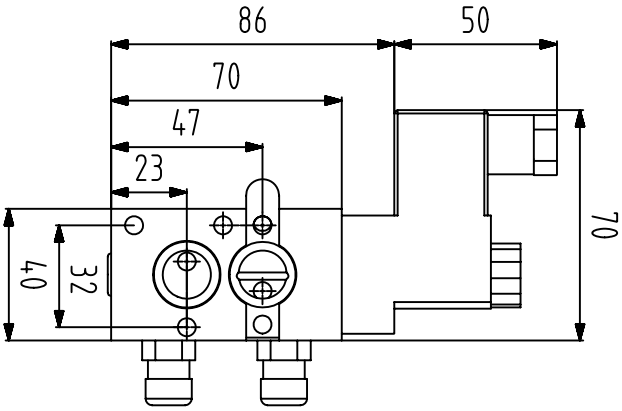

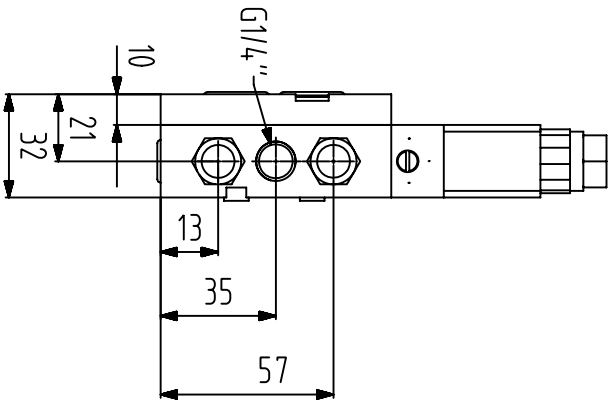

Pressure Reducing Valve
Type 582

General

- **Size**: ⅜"–2"
- **Material**: PVC, CPVC, PROGEF® Standard PP, SYGEF® Standard PVDF
- **Bonnet**: Glass-filled PP
- **Diaphragm**: PTFE/EPDM
- **Seals**: EPDM, FPM, PTFE
- **End Connection**: Solvent cement socket, threaded, flanged, fusion spigot, fusion socket
- **Mounting**: Stainless steel threaded inserts
- **Set Pressure Range**: 7-130psi
- **Hysteresis**: Approx. 1.5–5.8 psi
- **Standard Pack Quantity**: 1 valve

Key Certifications

- **FDA CFR 21 177.1520**: PP and PVDF
- **FDA CFR 21 177.2600**: EPDM and FPM
- **FDA CFR 21 177.1550**: PTFE
- **USP 25 Class VI (physiological non-toxic)**: PP and PVDF
- **ABS**: All materials

Sample Specification

The Type 582 Pressure Reducing Valve shall control downstream pressure. The set pressure shall be controlled via an adjustment screw. The body shall be fully molded. The spindle shall be of non-rising design. The bonnet connection shall be of threaded design. Versions utilizing elastomeric cartridge seals shall be positive shutoff. Versions utilizing PTFE cartridge seals be leakage class C according to DIN EN1226-1. The seal material shall be indicated by the color of an external tab. ANSI versions shall meet ANSI B16.5 150lb standards. All valves shall be tested in accordance to ISO9393. All valves shall be manufactured under ISO9001 for Quality and ISO14001 for Environmental Management. Following assembly, every valve shall be tested and certified bubble tight exceeding Class VI standards.

Important Note

- Minimum of 15psi differential pressure required to ensure proper functionality.

Material Specification

PVC valves shall meet ASTM D1784 cell classification 12454 standards. CPVC valves shall meet ASTM D1784 cell classification 23447-B standards. PP valves shall meet ASTM D5847-14 cell classification PP0510B66851 standards. PVDF valves shall be type 1, grade 2 according to ASTM D3222 standards. Valves of all materials shall be RoHS compliant.

Valve Function

The pressure reducing valve reduces the line pressure to a set value on the valve outlet. The outlet pressure is in no direct relation to the inlet pressure. Independent of raising or falling inlet pressure, the outlet pressure stays constant.

Key Design Feature

Fully Molded

The Type 582 Valve Body is fully molded, providing several performance benefits. Machining bodies can create sharp corners at high stress points that can lead to stress cracking. The flow characteristics between two like machined bodies can differ significantly because of small dimensional inconsistences and true union connections often require additional fusions which increases the number of leak paths in a given valve. The Type 582 eliminates all of these issues to provide consistent performance with a variety of end connection options.

Optional Features

- **Gauge**: SS304, Brass
- **Gauge Guard**: PVDF/EPDM, PVDF/FPM
- **End Connection**: Alternatives available upon request
- **Set Pressure Rang**e: 4-44psi
- **Cleaned**: Silicone free/oil free
- **High Purity**: Elastomeric version with positive shutoff

Material Availability

- ⅜" **(d16)** - PVC metric spigot (adapter unions available)
- **½"-2" (d20-d63)** - All material/end connections

Optional Feature

Pressure Gauges

- A pressure gauge can be mounted on either side of the valve to accommodate required installation direction and ensure gauge visibility. The two sides of the valve are differentiated by a letter molded into each side of the valve as shown below, side A flow going left to right and side B flow going right to left.
- Standard gauges are 304 stainless steel or brass with either EPDM or FPM elastomeric seals.
- Alternative gauges of the user's preference can be installed upon request either with a threaded adapter or direct mount.
- All valve bodies can accommodate two gauges at a time and both sides can be drilled to measuring either upstream or downstream pressure.

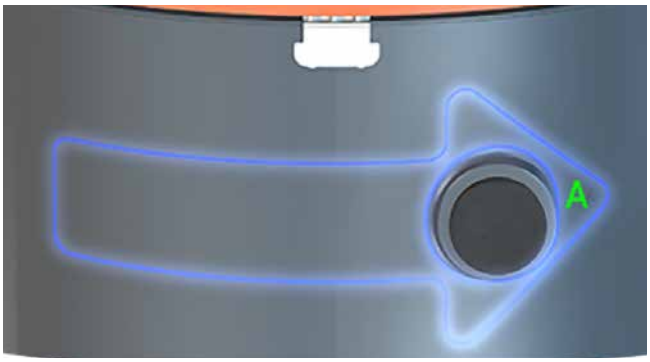

Components

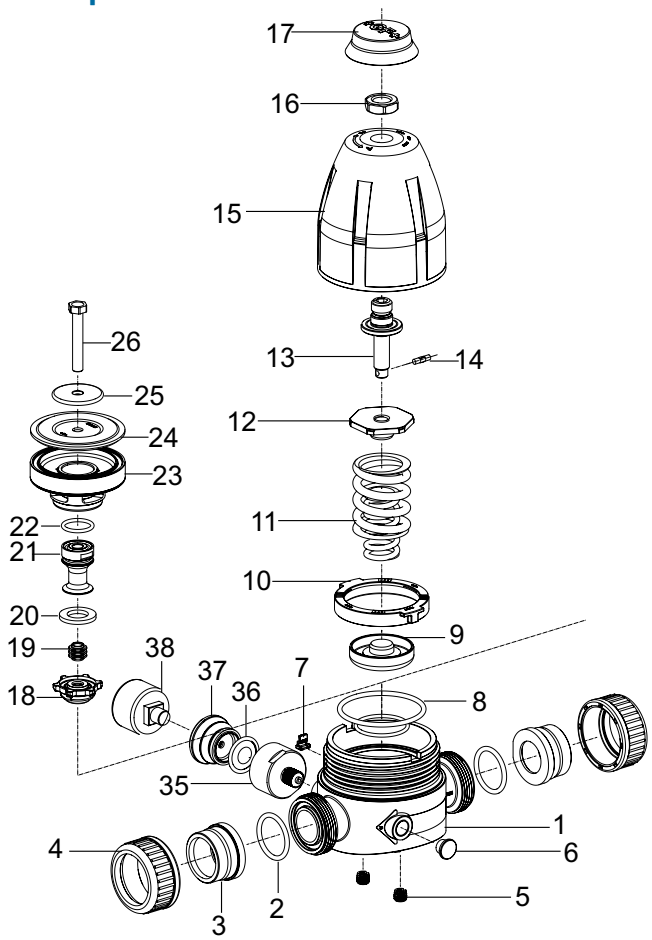

Part	Description	Material
1	Valve body	PVC, CPVC, PP or PVDF
2	Face seal	EPDM or FPM
3	Union end	PVC, CPVC, PP, PPn, ABS, PE or PVDF
4	Union nut	PVC, CPVC, PP or PVDF
5	Threaded insert	304 stainless steel
6	Gauge port plug	Glass-filled PP
7	Indicator tab	Glass-filled PP
8	Cartridge seal set	EPDM or FPM
9	Pressure piece	304 stainless steel
10	Retaining ring	Glass-filled PP
11	Spring set	Steel EN10270-1SH (C) Deltatone coated
12	Spring retainer	Brass
13	Spindle	304 stainless steel
14	Spindle pin	304 stainless steel
15	Bonnet	Glass-filled PP
16	Adjustment screw nut	304 stainless steel
17	Protective cap	Glass-filled PP
18	Cartridge nut cover	PVC, CPVC, PP or PVDF
19	Cartridge nut	304 stainless steel
20	Cartridge flat gasket	EPDM, FPM or PTFE
21	Piston	PVC, CPVC, PP or PVDF
22	Piston seal	EPDM, FPM or PTFE
23	Cartridge	PVC, CPVC, PP or PVDF
24	Diaphragm	PTFE/EPDM
25	Diaphragm plate	304 stainless steel

Key Design Features

Cartridge

The 5-Series PRV's modular design allows the user essentially completely rebuild a valve by swapping out the cartridge. A valve can be switched from reducing to retaining or vice versa in the same manner.

Modular Design

Multiple size valves of the same body material share components: ⅜" & ½", ¾" & 1" and 1¼"–2" have all like components listed above numbers 6-25.

Technical Data

Pressure Temperature Curves

The following graphs are based on a 25 year lifetime water or similar media application

PVC

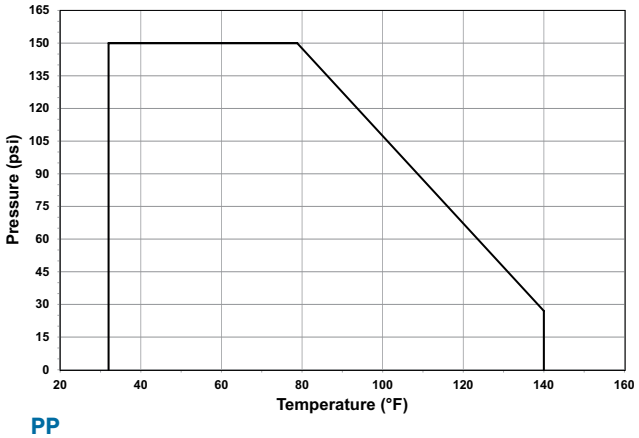

CPVC

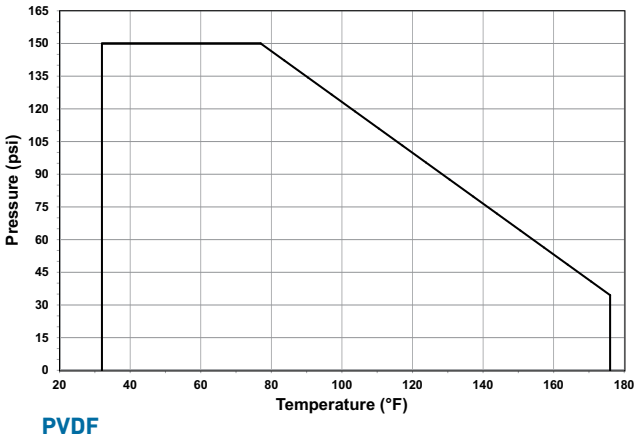

PP

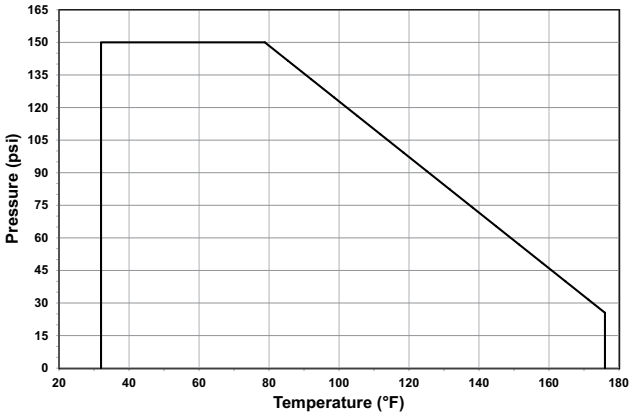

PVDF

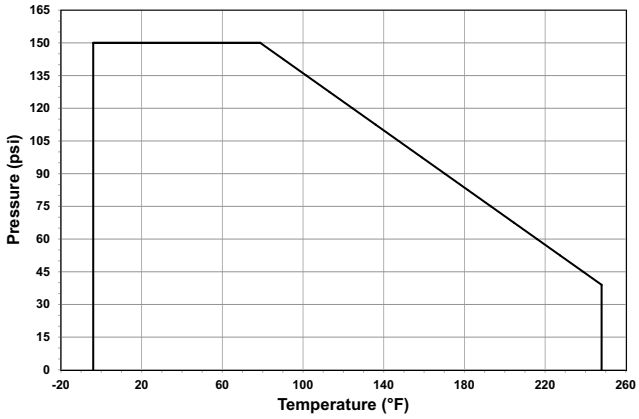

Pressure-Temperature

Material	Temperature Range (°F)	Max Pressure (psi)
PVC	32 to 140	150
CPVC	32 to 176	150
PP	32 to 176	150
PVDF	-4 to 284	150

Key Design Feature

The threaded bonnet design of the Type 582 was pioneered by GF and provides end users several benefits. Traditionally designed thermoplastic pressure regulating valves require metallic body bolts to compress the body seals. When a valve is used in a hot or cold line applications, the thermoplastic valve components and the metallic bolts expand and contract at different rates as they are heated or cooled. This can result in the degradation of the body seals that can only be avoided by the operator retorqing the body bolts following a significant process temperature change such as a hot line shut down. The threaded bonnet design eliminates this issue because the body and bonnet expand and contract at approximately the same rate, maintaining the diaphragm seal and reducing required maintenance.

Flow

The following graphs are based on a 25 year lifetime water or similar media application

Cv Values

Size (Inch)	d (mm)	Cv (gal/min)
⅜	16	3.1
½	20	3.3
¾	25	7.7
1	32	8.9
1¼	40	17.5
1½	50	20.2
2	63	22.0

Valve Sizing

Hysteresis Curve

The curves below are valid for the set range 7–130 psi and show the secondary or outlet pressure P2 over the flow Q in gal/min. Parameter is the set pressure pE at Q = 0 gal/min. There curves are valid for water at 70°F for a flow velocity of 6.6 ft/s.

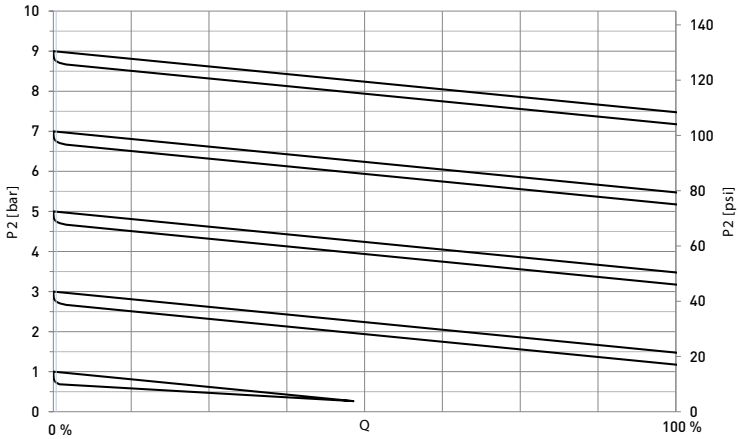

100% corresponds to a flow velocity of 6.6 ft/s

Max Flow Rates

Size		l/h	gpm
d16	(⅜")	1,000	4.4
d20	(½")	1,600	7.0
d25	(¾")	2,500	11.0
d32	(1")	4,000	17.6
d40	(1¼")	6,000	26.4
d50	(1½")	10,000	44.0
d63	(2")	16,000	70.4

On the left, you see the schematic diagrams of the hysteresis curve. The table above shows the maximum values at 100% in the diagram.

Key Design Feature

The high purity version of the Type 582 Pressure Reducing Valve provides several design improvements over competitive high purity PRVs. The elastomer free cartridge and reduced piston stroke greatly reduces particle shedding and leachable potential. All high purity valves are cleaned, assembled, tested and double bagged in a class 10,000 clean room.

Dimensions

The following tables are shown in millimeters unless otherwise specified

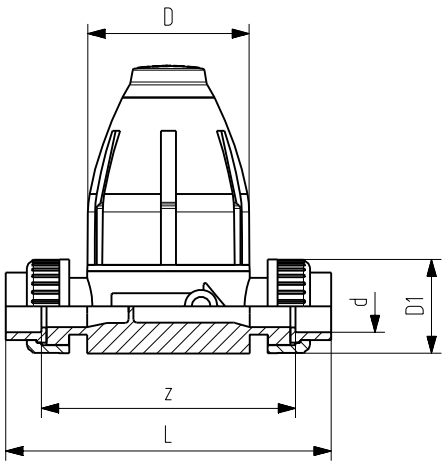

Socket/Threaded

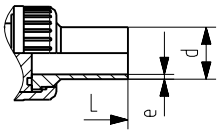

IR/Butt Union

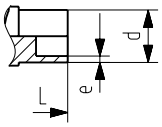

IR/Butt Spigot

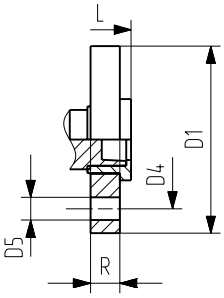

Flanged

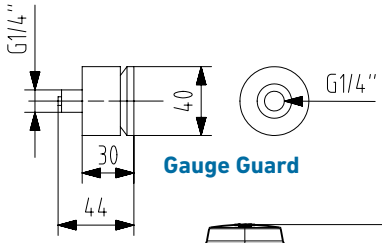

Gauge Guard

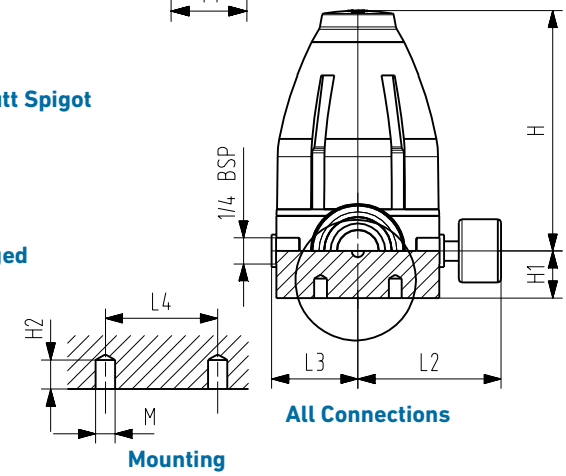

Mounting

All Connections

All Materials

Size (inch)	d (mm)	D	D1	H	H2	L2	L3	L4	M
⅜	16	79	43	111	12	77	42	45	M6
½	20	79	43	111	12	77	42	45	M6
¾	25	100	51	148	12	88	53	45	M6
1	32	100	58	148	12	88	53	45	M6
1¼	40	147	72	207	15	111	76	70	M8
1½	50	147	83	207	15	111	76	70	M8
2	63	147	101	207	15	111	76	70	M8

PVC/CPVC

	IPS Socket		Threaded NPT		ANSI Flanged				
Size (inch)	L	z	L	z	L	D1 (inch)	D4 (inch)	D5 (inch)	R (inch)
½	171	126	163	124	140	3.74	2.36	0.63	0.6
¾	207	156	198	157	180	4.13	2.76	0.63	0.7
1	214	156	203	155	180	4.53	3.11	0.63	0.7
1¼	275	211	269	213	229	5.51	3.5	0.63	0.8
1½	281	211	272	226	229	5.91	3.86	0.63	0.9
2	288	211	284	239	249	6.5	4.76	0.75	0.9

PP

d	IR/Butt Fusion Union		IR/Butt Fusion Spigot		Socket Fusion Union	
(mm)	L	e	L	e	L	z
20	228	1.9	150	1.9	158	126
25	264	2.3	190	2.3	192	156
32	270	2.9	190	2.9	196	156
40	331	3.7	240	3.7	255	211
50	337	4.6	240	4.6	261	211
63	343	5.8	259	5.8	269	211

PVDF

d	IR/Butt Fusion Union		IR/Butt Fusion Spigot		Socket Fusion Union	
(mm)	L	e	L	e	L	z
20	226	1.9	150	1.9	158	130
25	262	1.9	190	1.9	192	160
32	268	2.4	190	2.4	196	160
40	329	2.4	240	2.4	255	215
50	335	3	240	3	261	215
63	340	3	260	3	269	215

Pressure Retaining Valve
Type 586

General

- **Size**: ⅜"–2"
- **Material**: PVC, CPVC, PROGEF® Standard PP, SYGEF® Standard PVDF
- Bonnet: Glass-filled PP
- **Diaphragm**: PTFE/EPDM
- **Seals**: EPDM, FPM, PTFE
- **End Connection**: Solvent cement socket, threaded, flanged, fusion spigot, fusion socket
- **Mounting**: Stainless steel threaded inserts
- **Set Pressure Range**: 7-150psi
- **Hysteresis**: Approx. 1.5–5.8 psi
- **Standard Pack Quantity**: 1 valve

Key Certifications

- **FDA CFR 21 177.1520**: PP and PVDF
- **FDA CFR 21 177.2600**: EPDM and FPM
- **FDA CFR 21 177.1550**: PTFE
- **USP 25 Class VI (physiological non-toxic)**: PP and PVDF
- **ABS**: All materials

Sample Specification

The Type 586 Pressure Retaining Valve shall control upstream pressure and be positive shutoff. The set pressure shall be controlled via an adjustment screw. The body shall be fully molded. The spindle shall be of non-rising design. The bonnet connection shall be of threaded design. The seal material shall be indicated by the color of an external tab. ANSI versions shall meet ANSI B16.5 150lb standards. All valves shall be tested in accordance to ISO9393. All valves shall be manufactured under ISO9001 for Quality and ISO14001 for Environmental Management. Following assembly, every valve shall be tested and certified bubble tight exceeding Class VI standards.

Material Specification

PVC valves shall meet ASTM D1784 cell classification 12454 standards. CPVC valves shall meet ASTM D1784 cell classification 23447-B standards. PP valves shall meet ASTM D5847-14 cell classification PP0510B66851 standards. PVDF valves shall be type 1, grade 2 according to ASTM D3222 standards. Valves of all materials shall be RoHS compliant.

Valve Function

The pressure retaining valve maintains the line pressure to a set value on the valve inlet. The inlet pressure is in direct relation to the flow. Independent of pressure fluctuations, the system pressure stays largely constant. The Type 586 can be used in relief applications in combination with a tee.

Components

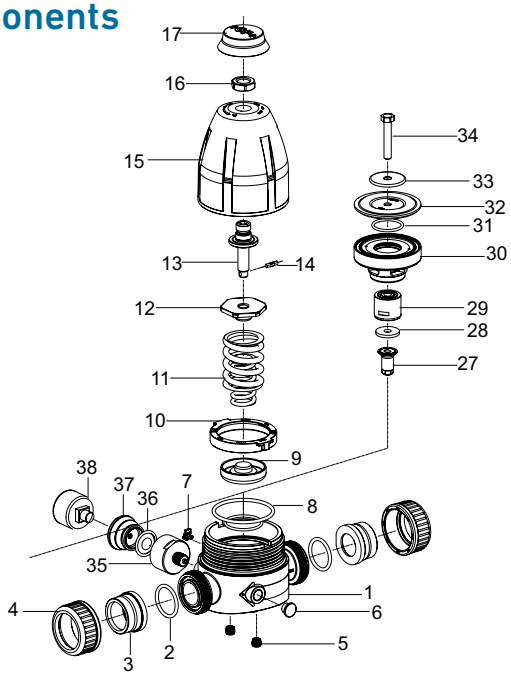

Optional Features

- **Gauge**: SS304, Brass
- **Gauge Guard**: PVDF/EPDM, PVDF/FPM
- **End Connection**: Alternatives available upon request
- **Set Pressure Range**: 4-44psi
- **Cleaned**: Silicone free/oil free
- **High Purity**: PVDF

Material Availability

- ⅜" **(d16)** - PVC metric spigot (adapter unions available)
- **½"-2" (d20-d63)** - All material/end connections

Part	Description	Material
1	Valve body	PVC, CPVC, PP or PVDF
2	Face seal	EPDM or FPM
3	Union end	PVC, CPVC, PP, PPn, ABS, PE or PVDF
4	Union nut	PVC, CPVC, PP or PVDF
5	Threaded insert	304 stainless steel
6	Gauge port plug	Glass-filled PP
7	Indicator tab	Glass-filled PP
8	Cartridge seal set	EPDM or FPM
9	Pressure piece	304 stainless steel
10	Retaining ring	Glass-filled PP
11	Spring set	Steel EN10270-1SH (C) Deltatone coated
12	Spring retainer	Brass
13	Spindle	304 stainless steel
14	Spindle pin	304 stainless steel
15	Bonnet	Glass-filled PP
16	Adjustment screw nut	304 stainless steel
17	Protective cap	Glass-filled PP
27	Piston	PVC, CPVC, PP or PVDF
28	Cartridge flat gasket	EPDM or FPM
29	Piston housing	PVC, CPVC, PP or PVDF
30	Cartridge	PVC, CPVC, PP or PVDF
31	Piston seal	EPDM or FPM
32	Diaphragm	PTFE/EPDM
33	Diaphragm plate	304 stainless steel
34	Cartridge bolt	304 stainless steel

Technical Data

The following information is based on a 25 year lifetime water or similar media application

Cv Values

SIze (Inch)	d (mm)	Cv (gal/min)
⅜	16	3.5
½	20	3.6
¾	25	7.9
1	32	8.6
1¼	40	18.1
1½	50	19.7
2	63	20.2

Pressure-Temperature

Material	Temperature Range (°F)	Max Pressure (psi)
PVC	32 to 140	150
CPVC	32 to 176	150
PP	32 to 176	150
PVDF	-4 to 284	150

Pressure Temperature Curves

The following graphs are based on a 25 year lifetime water or similar media application

PVC

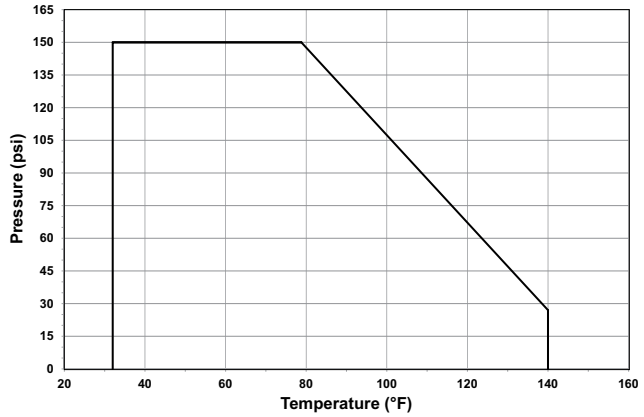

CPVC

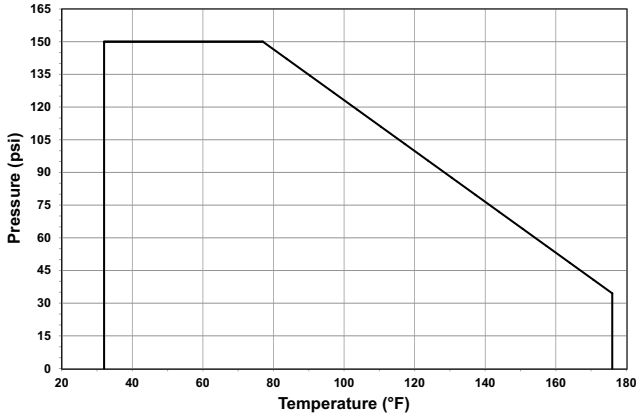

PP

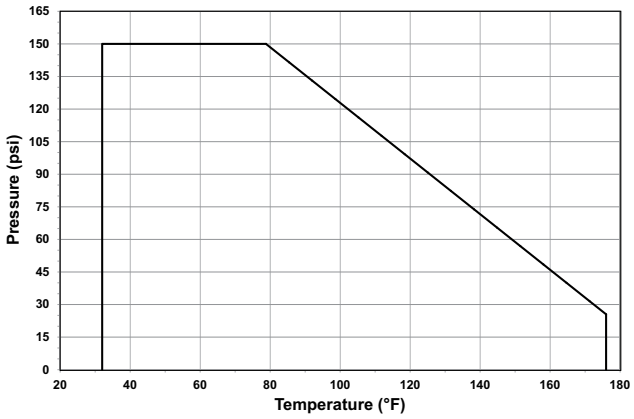

PVDF

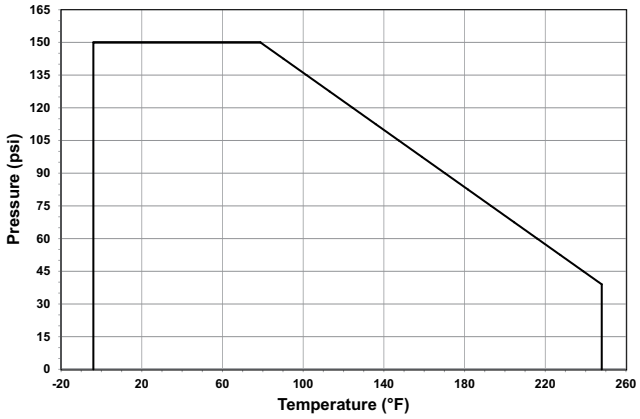

Valve Sizing

Hysteresis Curve

The curves below are valid for the set range 7–150 psi and show the secondary or outlet pressure P2 over the flow Q in gal/min. Parameter is the set pressure pE at Q = 0 gal/min. There curves are valid for water at 70°F for a flow velocity of 6.6 ft/s.

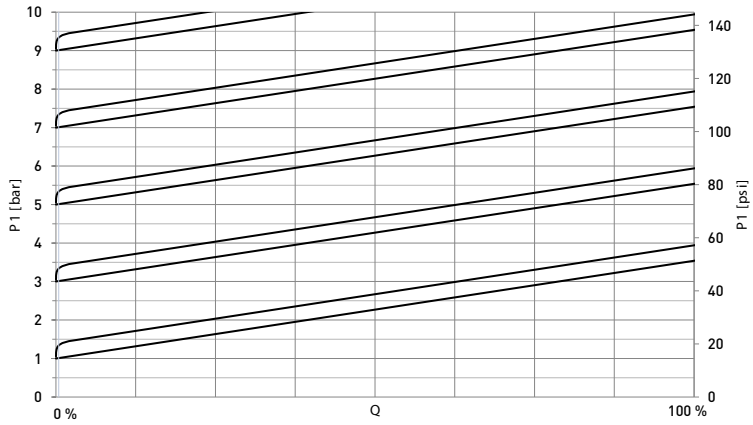

100% corresponds to a flow velocity of 6.6 ft/s

Max Flow Rates

Size		l/h	gpm
d16	(⅜")	1,000	4.4
d20	(½")	1,600	7.0
d25	(¾")	2,500	11.0
d32	(1")	4,000	17.6
d40	(1¼")	6,000	26.4
d50	(1½")	10,000	44.0
d63	(2")	16,000	70.4

On the left, you see the schematic diagrams of the hysteresis curve. The table above shows the maximum values at 100% in the diagram.

Dimensions

The following tables are shown in millimeters unless otherwise specified

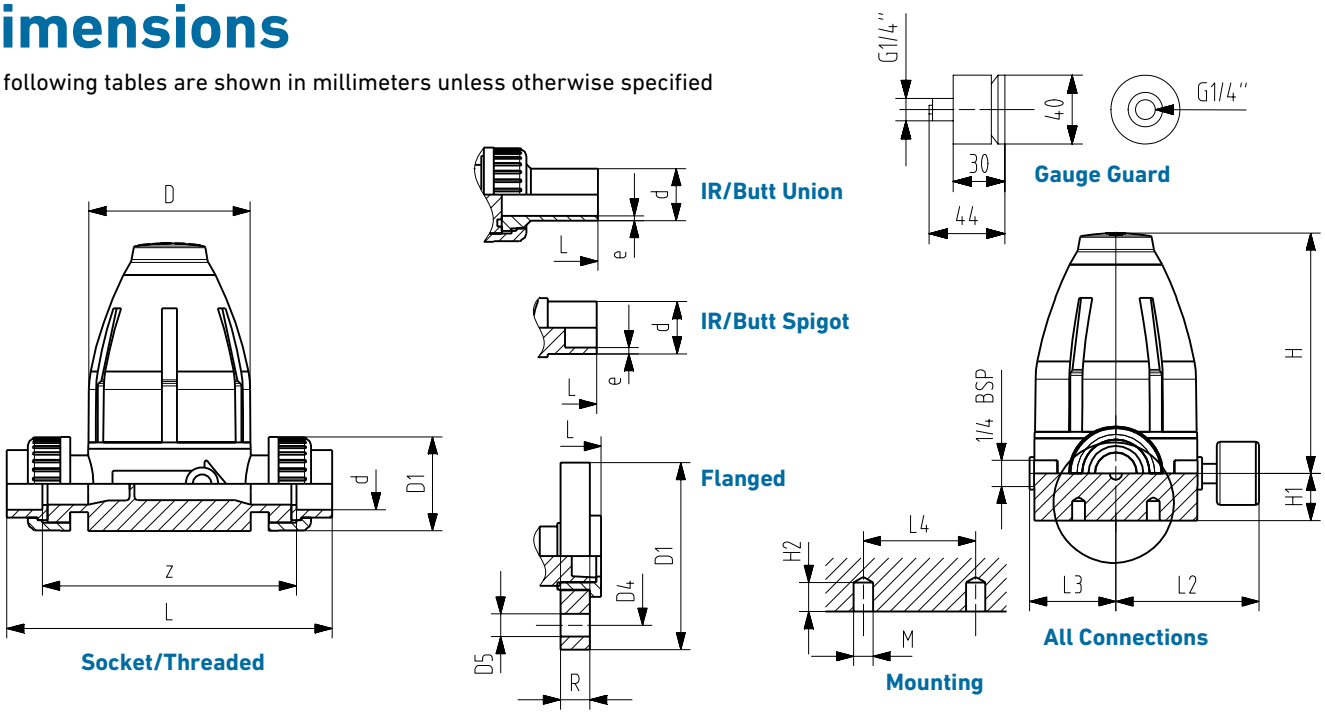

All Materials

Size (inch)	d (mm)	D	D1	H	H2	L2	L3	L4	M
⅜	16	79	43	111	12	77	42	45	M6
½	20	79	43	111	12	77	42	45	M6
¾	25	100	51	148	12	88	53	45	M6
1	32	100	58	148	12	88	53	45	M6
1¼	40	147	72	207	15	111	76	70	M8
1½	50	147	83	207	15	111	76	70	M8
2	63	147	101	207	15	111	76	70	M8

PVC/CPVC

	IPS Socket		Threaded NPT		ANSI Flanged				
Size (inch)	L	z	L	z	L	D1 (inch)	D4 (inch)	D5 (inch)	R (inch)
½	171	126	163	124	140	3.74	2.36	0.63	0.6
¾	207	156	198	157	180	4.13	2.76	0.63	0.7
1	214	156	203	155	180	4.53	3.11	0.63	0.7
1¼	275	211	269	213	229	5.51	3.5	0.63	0.8
1½	281	211	272	226	229	5.91	3.86	0.63	0.9
2	288	211	284	239	249	6.5	4.76	0.75	0.9

PP

d	IR/Butt Fusion Union		IR/Butt Fusion Spigot		Socket Fusion Union	
(mm)	L	e	L	e	L	z
20	228	1.9	150	1.9	158	126
25	264	2.3	190	2.3	192	156
32	270	2.9	190	2.9	196	156
40	331	3.7	240	3.7	255	211
50	337	4.6	240	4.6	261	211
63	343	5.8	259	5.8	269	211

PVDF

d	IR/Butt Fusion Union		IR/Butt Fusion Spigot		Socket Fusion Union	
(mm)	L	e	L	e	L	z
20	226	1.9	150	1.9	158	130
25	262	1.9	190	1.9	192	160
32	268	2.4	190	2.4	196	160
40	329	2.4	240	2.4	255	215
50	335	3	240	3	261	215
63	340	3	260	3	269	215

Variable Area Flow Meters

Rotameters

General

- **Size**: ⅜"–2½"
- **Total Flow Range**: 0.01–264 gpm
- **Tube Material**: PA, PSU, PVC transparent
- **Seal**: EPDM, FPM
- **Float**: PVDF, PVDF-HP transparent
- **End Connection**: Solvent cement socket, threaded, flanged, fusion spigot union, fusion socket union

Key Certifications and Conformity

- **FDA CFR 21 177.1520**: PP and PVDF
- **FDA CFR 21 177.2600**: EPDM and FPM
- **FDA CFR 21 177.1550**: PTFE
- **USP 25 Class VI (physiological non-toxic)**: PP and PVDF
- **VDE/VDI 3513**: Accuracy class 4

Optional Features

- **Limit Switches**: Mechanical
- **Float Position Sensor**: 4-20mA
- **Scale**: Custom scales available upon request
- **End Connection**: Alternatives available upon request
- **Face Seals**: Alternatives available upon request
- **Cleaned**: Silicone free/oil free

Material Specification

PVC components shall meet ASTM D1784 cell classification 12454 standards. CPVC components shall meet ASTM D1784 cell classification 23447-B standards. PP components shall meet ASTM D5847-14 cell classification PP0510B66851 standards. ABS valves shall meet ASTM D3965 cell classification 42222 standards. PVDF components shall be type 1, grade 2 according to ASTM D3222 standards. Rotameters of all materials shall be RoHS compliant.

Definition of Type

Type	Connection[2]	Description
336	IPS	Standard tube, 335 mm
335	Metric	Standard tube, 335 mm
335-HP	Metric	UPW tube, 335 mm
350[1]	Metric	Standard tube, 350 mm
807	IPS	Short tube, 200 mm
807-HP	Metric	UPW tube, 200 mm

[1] Not detailed in this document
[2] Standard connection standard listed, alternatives available upon request

Definition of SK

All rotameter tubes, accessories, complete assemblies as well as many spare parts have an associated SK number. This number is used to define component compatibility. Please note that only products with the same SK number are compatible with each other.

Important: The UPW Rotameter Family does not completely follow this structure in that the UPW SK numbers should only be used for sizing electronic feedback accessories. The UPW subcomponents are specifically designed for this product line and differ from the standard subcomponents. Optional scales, unless specifically designed for the UPW tube, will therefor not read accurately.

Components

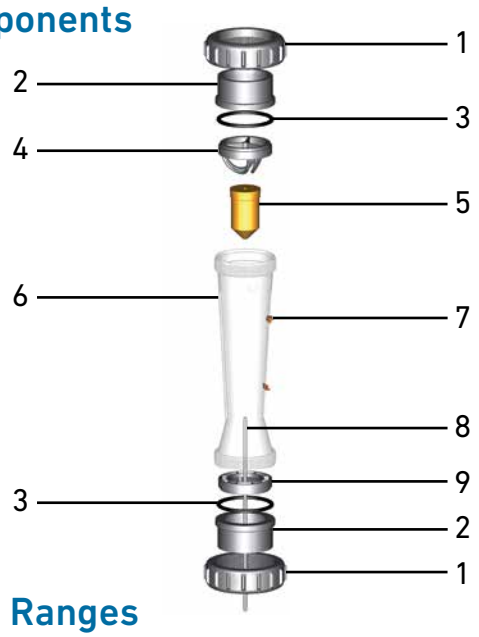

Components

Part	Description	Material
1	Union Nut	PVC, PVDF
2	Union End	PVC, CPVC, PP, PVDF
3	Union O-ring	EPDM, FPM
4	Top Insert	PVDF,
5	Float	PVDF, PVDF transparent
6	Tube	PSU, PA, PVC transparent
7	Flow Indicator Bracket	PS
8	Guide Rod[1]	PEEK, SS, PVDF coated SS
9	Bottom Insert	PVDF

[1] Required for rotameters SK31-42 only

Flow Ranges

The following tables detail the available scale ranges in gal/min within each rotameter family based on water applications at 68° F.

Type 335/336: Scale Range

Size (inch)	d (mm)	SK	Scale Range (gpm)
1	32	10	0.22 - 2.2
1	32	11	0.44 - 4.4
1¼	40	15	0.66 - 6.6
1¼	40	16	1.10 - 11.0
1½	50	19	0.88 - 8.8
1½	50	20	1.32 - 13.2
1½	50	21	2.64 - 26.4
2	63	29	2.64 - 26.4
2	63	30	4.4 - 44.0
2	63	31	6.6 - 66.0
2½	75	40	8.8 - 88.0
2½	75	41	13.2 - 132.0
2½	75	42	35.2 - 264.0

Type 807: Scale Range

Size (inch)	d (mm)	SK	Scale Range (gpm)
⅜	16	50	0.01 - 0.11
⅜	16	51	0.02 - 0.22
⅜	16	52	0.04 - 0.44
½	20	60	0.03 - 0.35
½	20	61	0.06 - 0.66
½	20	62	0.08 - 0.88
1	32	70	0.06 - 0.66
1	32	71	0.13 - 1.32
1	32	72	0.22 - 2.20
1	32	73	0.44 - 4.40

UPW Scale Range

d (mm)	SK	Type	Scale Range (gpm)
32	70	807-HP	0.36 - 1.0
32	71	807-HP	0.4 - 1.4
32	73	807-HP	0.6 - 3.5
32	11	335-HP	0.44 - 4.4
50	20	335-HP	1.3 - 13.2
50	21	335-HP	2.6 - 26.4
63	30	335-HP	4.4 - 35.2
63	31	335-HP	6.6 - 66.0
75	40	335-HP	8.8 - 88.0
75	41	335-HP	13.2 - 127.7

Measurement Accuracy

Based on water applications at 68° F.

Flowrate (% of Scale)	Measured Error (%)	Measured Error (Engineering Units)
10	13.0	1.3
20	8.0	1.6
30	6.33	1.9
40	5.50	2.2
50	5.0	2.5
60	4.83	2.9
70	4.43	3.1
80	4.25	3.4
90	4.11	3.7
100	4.0	4.0

In accordance with VDE/VDI 3515, Accuracy Class 4

Optional Scales

Units	335/336	807	UPW
gpm	✔	✔	-
l/h	✔	✔	-
Percent (10-100%)	✔	✔	-
m^3/h	✔	-	-
l/h, NaOH 30%	✔	✔	-
l/h, NaOH 50%	✔	✔	-
l/h, HCL 30%	✔	✔	-
Nm^3/h, Air	✔	✔	-

Important: The defined Flow Ranges for each family of rotameter are accurate for water at 68°F with gpm as the unit of measurement. The equivalent l/h or m^3/h scale range can be calculated using these tables and converting the unit of measurement. The optional chemical and air scale ranges shown at left are not directly convertible using this same method because of the changes in media properties. Please consult GF for correct scale ranges for these types of scales.

Pressure Temperature Curves

The following graphs are based on a 25 year lifetime water or similar media application

PVC

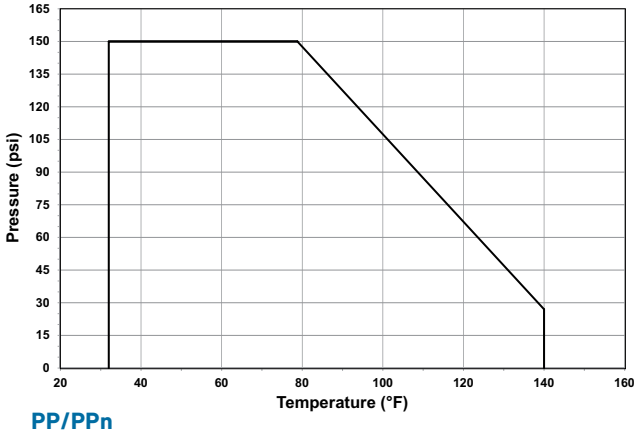

CPVC

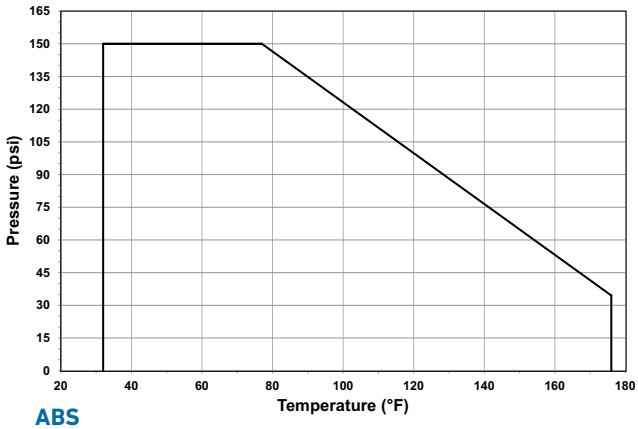

PP/PPn

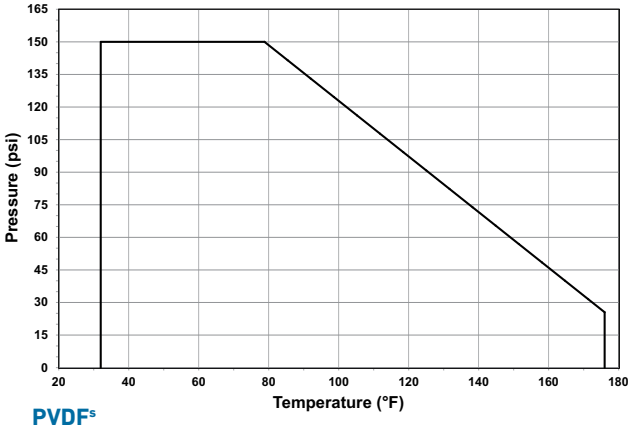

ABS

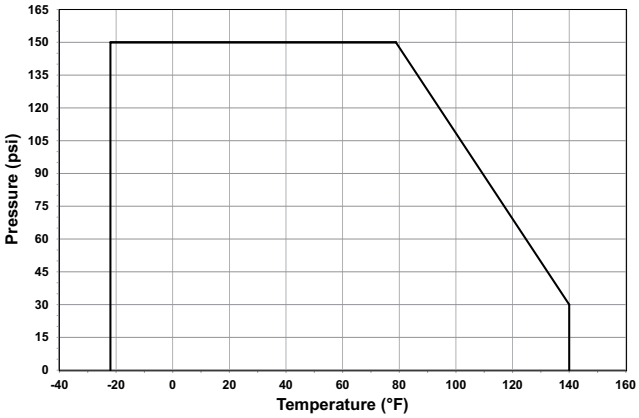

PVDF[s]

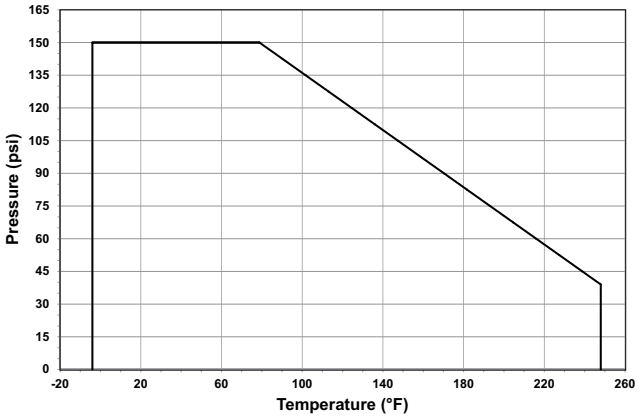

Pressure-Temperature

Material	Temperature Range (°F)	Max Pressure (psi)
PVC	32 to 140	150
CPVC	32 to 176	150
PP/PPn	32 to 176	150
ABS	-40 to 140	150
PVDF	-4 to 284	150
PA	32 to 140	150
PSU	32 to 194	150

An assembly's rated temperature range is constrained to the limiting material's range. Both the tube and end connection material need to be considered when determining the full assembly temperature range.

Pressure Loss

The following information is based on water applications at 68° F. Pressure loss is constant over the scale range.

Type 807

Size (inch)	d (mm)	SK	Pressure Loss (psi)
⅜	16	50	0.06
⅜	16	51	0.06
⅜	16	52	0.06
½	20	60	0.12
½	20	61	0.12
½	20	62	0.12
1	32	70	0.07
1	32	71	0.07
1	32	72	0.07
1	32	73	0.07

UPW

d (mm)	SK	Type	Pressure Loss (psi)
32	70	807-HP	0.07
32	71	807-HP	0.07
32	73	807-HP	0.07
32	11	335-HP	0.34
50	20	335-HP	0.36
50	21	335-HP	0.36
63	30	335-HP	0.36
63	31	335-HP	0.43
75	40	335-HP	0.44
75	41	335-HP	0.68

Type 335/336

Size (inch)	d (mm)	SK	Pressure Loss (psi)
1	32	10	0.33
1	32	11	0.33
1¼	40	15	0.33
1¼	40	16	0.33
1½	50	19	0.36
1½	50	20	0.36
1½	50	21	0.36
2	63	29	0.36
2	63	30	0.36
2	63	31	0.41
2½	75	40	0.66
2½	75	41	0.66
2½	75	42	0.68

Correction Factors

Correction factors are used when application parameters differ from those at which the provided scale was calibrated to. All GF scales are calibrated at 68° F with water, a specific chemical media (HCL, NaOH) or air as the media depending on the scale. If system conditions differ from these parameters an operator can multiply the scale reading by the correction factors listed below to determine the actual flow volume.

Liquid

Specific Gravity	Correction Factor
0.5	1.464
0.6	1.320
0.7	1.220
0.8	1.133
0.9	1.060
1.0	1.000
1.1	0.946
1.2	0.896
1.3	0.857
1.4	0.820
1.5	0.787
1.6	0.755
1.7	0.726
1.8	0.700
1.9	0.676
2.0	0.654

Temperature

Operating Temperature (°F)	Correction Factor
32	1.035
50	1.018
68	1.000
86	0.984
104	0.967
122	0.953
140	0.938
158	0.924
176	0.927

Gas

Media	Density (kg/m³)	Correction Factor
Air	1.293	1.0
Oxygen	1.429	0.953
Nitrogen	1.251	1.017
Ammonia	0.771	1.295
Acetylene	1.171	1.050
Chlorine	3.220	0.633
Hydrogen	0.089	3.810
Carbon Dioxide	1.997	0.800
Sulphur Dioxide	2.926	0.668
Coal Gas	0.550	1.532
Propane	2.020	0.800

Dimensions

The following tables are shown in millimeters unless otherwise specified

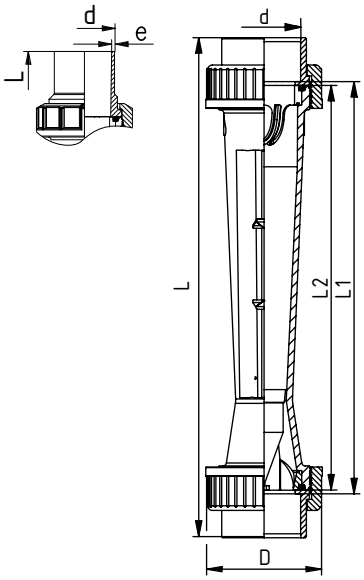

Type 335/336: All Materials

Size (inch)	d (mm)	SK	D	L2
1	32	10	58	335
1	32	11	58	335
1¼	40	15	72	335
1¼	40	16	72	335
1½	50	19	83	335
1½	50	20	83	335
1½	50	21	83	335
2	63	29	101	335
2	63	30	101	335
2	63	31	101	335
2½	75	40	135	335
2½	75	41	135	335
2½	75	42	135	335

Type 335/336

		PVC				CPVC			
		IPS Socket		Threaded NPT		IPS Socket		Threaded NPT	
Size (inch)	SK	L	L1	L	L1	L	L1	L	L1
1	10	400	341	386	341	400	341	386	341
1	11	400	341	386	341	400	341	386	341
1¼	15	406	341	394	341	406	341	394	341
1¼	16	406	341	394	347	406	341	394	347
1½	19	413	341	405	357	413	341	405	357
1½	20	413	341	405	357	413	341	405	357
1½	21	413	341	405	357	413	341	405	357
2	29	419	341	419	369	419	341	419	369
2	30	419	341	419	369	419	341	419	369
2	31	419	341	419	369	419	341	419	369
2½	40	429	341	437	365	433	343	437	365
2½	41	429	341	437	365	433	343	437	365
2½	42	429	341	437	365	433	343	437	365

Type 335/336

		ABS	
		Metric Socket	
d(mm)	SK	L	L1
32	10	390	346
32	11	390	346
40	15	398	342
40	16	398	342
50	19	405	343
50	20	405	343
50	21	405	343
63	29	419	343
63	30	419	343
63	31	419	343
75	40	435	345
75	41	435	345
75	42	435	345

Type 335/336

		PP						PVDF					
		Metric Socket		IR/Butt Fusion		Threaded NPT		Metric Socket		IR/Butt Fusion		Threaded NPT	
d(mm)	SK	L	L1	L	e	L	L1	L	L1	L	e	L	L1
32	10	382	342	456	2.9	392	348	382	346	318	2.4	53	63
32	11	382	342	456	2.9	392	348	382	346	318	2.4	53	63
40	15	386	342	462	3.7	398	350	386	346	460	2.4	398	352
40	16	386	342	462	3.7	398	350	386	346	460	2.4	398	352
50	19	393	343	469	4.6	405	359	393	347	466	3.0	405	359
50	20	393	343	469	4.6	405	359	393	347	466	3.0	405	359
50	21	393	343	469	4.6	405	359	393	347	466	3.0	405	359
63	29	401	343	475	5.8	419	371	401	347	472	3.0	419	371
63	30	401	343	475	5.8	419	371	401	347	472	3.0	419	371
63	31	401	343	475	5.8	419	371	401	347	472	3.0	419	371
75	40	435	377	469	6.8	-	-	435	377	495	3.6	-	-
75	41	435	377	469	6.8	-	-	435	377	495	3.6	-	-
75	42	435	377	469	6.8	-	-	435	377	495	3.6	-	-

Dimensions

The following tables are shown in millimeters unless otherwise specified

Type 807: All Materials

Size (inch)	d (mm)	SK	D	L2
⅜	16	50	35	200
⅜	16	51	35	200
⅜	16	52	35	200
½	20	60	43	200
½	20	61	43	200
½	20	62	43	200
1	32	70	60	200
1	32	71	60	200
1	32	72	60	200
1	32	73	60	200

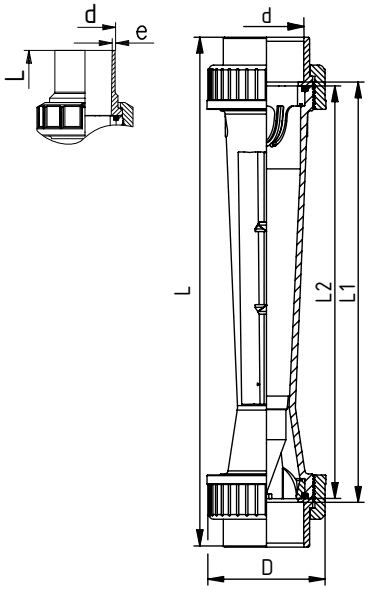

Type 807

Size (inch)	SK	PVC/CPVC IPS Socket L	PVC/CPVC IPS Socket L1	PVC/CPVC Threaded NPT L	PVC/CPVC Threaded NPT L1	ABS Metric Socket L	ABS Metric Socket L1
⅜	50	244	206	234	208	-	-
⅜	51	244	206	234	208	-	-
⅜	52	244	206	234	208	-	-
½	60	250	206	238	204	242	208
½	61	250	206	238	204	242	208
½	62	250	206	238	204	242	208
1	70	265	207	251	207	255	211
1	71	265	207	251	207	255	211
1	72	265	207	251	207	255	211
1	73	265	207	251	207	255	211

Type 807

d (mm)	SK	PP Metric Socket L	PP Metric Socket L1	PP IR/Butt Fusion L	PP IR/Butt Fusion e	PP Threaded NPT L	PP Threaded NPT L1
16	50	236	206	-	-	240	214
16	51	236	206	-	-	240	214
16	52	236	206	-	-	240	214
20	60	238	206	242	1.9	242	208
20	61	238	206	242	1.9	242	208
20	62	238	206	242	1.9	242	208
32	70	247	207	257	2.9	257	213
32	71	247	207	257	2.9	257	213
32	72	247	207	257	2.9	257	213
32	73	247	207	257	2.9	257	213

UPW

d(mm)	SK	PVDF-HP IR/Butt Fusion Spigot D	PVDF-HP IR/Butt Fusion Spigot e	PVDF-HP IR/Butt Fusion Spigot L	PVDF-HP IR/Butt Fusion Spigot L2
32	70	60	2.4	318	200
32	71	60	2.4	318	200
32	73	60	2.4	318	200
32	11	60	2.4	453	335
50	20	83	3.0	466	335
50	21	83	3.0	466	335
63	30	103	3.0	472	335
63	31	103	3.0	472	335
75	40	122	3.6	495	335
75	41	122	3.6	495	335

Type 807

d (mm)	SK	PVDF Metric Socket L	PVDF Metric Socket L1	PVDF IR/Butt Fusion L	PVDF IR/Butt Fusion e	PVDF Threaded NPT L	PVDF Threaded NPT L1
16	50	236	210	-	-	240	212
16	51	236	210	-	-	240	212
16	52	236	210	-	-	240	212
20	60	242	210	306	1.9	242	208
20	61	242	210	306	1.9	242	208
20	62	242	210	306	1.9	242	208
32	70	247	211	318	2.4	247	257
32	71	247	211	318	2.4	247	257
32	72	247	211	318	2.4	247	257
32	73	247	211	318	2.4	247	257

GF Piping Systems

The New Pressure Regulating Valve and the New 578 Valve

The innovative modular 5 series pressure regulating valve (PRV) has a modular design allows users to easily change configurations. The valve can be changed from a back-pressure valve to a reducing valve by simply changing out the cartridge. Springs can be added or removed to meet optimum pressure ranges. In addition, the modular design allows for easy and quick maintenance for scheduled shutdowns. An online tool is available, making sizing a breeze. All sizes are molded, which eliminates inconsistencies found in machined valves. The Type 586 is the pressure-retaining or back-pressure valve; it maintains back pressure and can act as a pressure relief valve. The Type 582 valve is the pressure reducing version.

- **No re-torqueing needed**
- **Modular**
- **Online tool makes sizing a breeze**
- **100% molded design means consistent quality**

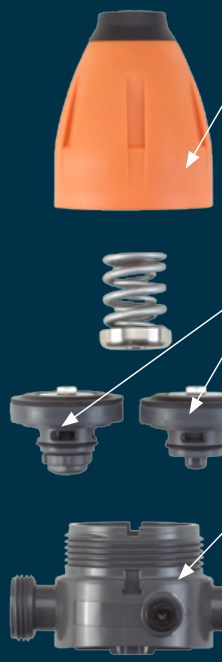

The 578 butterfly valve has stainless steel threaded inserts allowing it to be installed in end-of-line service. This means maintenance can be performed on one side of the valve while having full pressure on the other. In addition, the valve has all the advantages of our double eccentric butterfly valves. The double eccentric design is superior to the traditional boot design because it has about half the required torque and is not susceptible to swelling over time. This all translates to a product that is more user-friendly and has a longer life span.

No problematic boot

GF Piping Systems

Contact us

Tel. (714) 731-8800, Toll Free (800) 854-4090
Fax (714) 731-6201
us.ps@georgfischer.com
www.gfpiping.com

+GF+

Item #1334 (12/16)

Printed in USA